THE

WIRELESS ENGINEER

VOL. XVII. AUGUST, 1940 No. 203

Editorial

Amplitude, Frequency and Phase-Angle Modulation

A RADIO-FREQUENCY alternating current or voltage can be represented by the formula $a = A_0 \cos(\omega_0 t + \phi)$. Audio-frequency modulation can be applied to the amplitude A_0, the frequency $\omega_0/2\pi$, or the phase-angle ϕ. The first is almost universal but the other methods of modulation have been discussed from time to time since Carson's 1922 paper* on the subject, and have been more recently given considerable publicity owing to the work of Armstrong[9] and Crosby.[10]

If the amplitude is modulated by a single pure tone we can write

$$a = A_0(1 + M \cos \omega_m t) \cos \omega_0 t$$

assuming for simplicity that $\phi = 0$, or

$$a = A_0 \cos \omega_0 t + A_0 \frac{M}{2} \cos(\omega_0 + \omega_m)t + A_0 \frac{M}{2} \cos(\omega_0 - \omega_m)t \quad .. \quad (1)$$

the well-known expression for the carrier of amplitude A_0 and the two side bands of amplitude $\frac{M}{2} A_0$.

If the phase angle is modulated, the amplitude remaining unaffected, we can write

$$a = A_0 \cos(\omega_0 t + \Phi \cos \omega_m t) \quad .. \quad (2)$$

where Φ is the extreme angular displacement of the rotary vector from its unmodulated position; it might be called the angular throw.

If the frequency is modulated so that $\omega = \omega_0(1 + m \cos \omega_m t)$, we can write

$$a = A_0 \cos\left[\omega_0 t + m\omega_0 \int_0^t \cos \omega_m t \, dt\right]$$

$$= A_0 \cos\left[\omega_0 t + m \frac{\omega_0}{\omega_m} \sin \omega_m t\right] \quad .. \quad (3)$$

If, however, we write $\omega = \omega_0(1 - m \sin \omega_m t)$, then

$$a = A_0 \cos\left[\omega_0 t + m \frac{\omega_0}{\omega_m} \cos \omega_m t\right] \quad .. \quad (3a)$$

which is the same as (2) if the angular throw $\Phi = m \frac{\omega_0}{\omega_m}$ radians.

It should be noted that a sinusoidal variation of the capacitance in an oscillatory circuit does not give a pure sinusoidal modulation of the frequency, since the frequency depends on $1/\sqrt{C}$. For small variations of C, however, the modulation is very nearly sinusoidal. A mathematical analysis of frequency modulation by variation of capacitance was given by van der Pol[5] in 1930.

Formula (2) for phase angle modulation

* See references 1–8.

www.americanradiohistory.com

can be written

$$a = A_0[\cos \omega_0 t \cos (\Phi \cos \omega_m t) - \sin \omega_0 t \sin (\Phi \cos \omega_m t)]$$

The second factor in each term can be represented by Bessel functions of the first kind of the argument Φ, but if Φ is less than about 0.5 the formula reduces approximately to

$$a = A_0[\cos \omega_0 t - \Phi \sin \omega_m t \sin \omega_0 t]$$

$$= A_0 \cos \omega_0 t + A_0 \frac{\Phi}{2} \cos (\omega_0 + \omega_m)t - A_0 \frac{\Phi}{2} \cos (\omega_0 - \omega_m)t \quad .. \quad (4)$$

On comparing this with formula (1) for amplitude modulation, it is seen that the

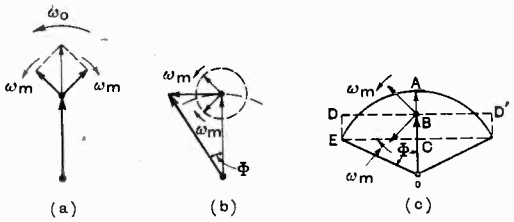

Fig. 1.

sign of the last term has changed, which means that the phase of the lower frequency sideband is reversed. It will be clear from Fig. 1(b) that the result of this is to turn the resultant of the two side bands through 90°, so that instead of being added to or subtracted from the carrier vector as in Fig. 1 (a), it is now at right angles to it, giving a resultant that swings about it. Hence, so long as the angular throw Φ is small, both frequency and phase-angle modulation can be analysed approximately into the same carrier and side bands as an amplitude modulated current, except for the phase of the side bands. Fig. 1 (b) also illustrates the effect of the approximation made above and the error introduced if Φ is not small, for the end of the resultant in Fig. 1 (b) moves along the tangent to the circle and not along the circle, as it should do. In Fig. 1 (c) Φ is so large that the approximation is obviously no longer permissible and the calculation must involve the Bessel functions. Fig. 1 (c) enables us, however, to obtain a rough approximation to the next step in the analysis and shows clearly what is happening. If one assumes that the carrier vector is reduced from OA to OB where B is midway between A and C, the resultant of the $(\omega_0+\omega_m)$ and $(\omega_0 - \omega_m)$ side bands will move the end of the vector to and fro along the line DD'. If now, when it is at B we add to it the vector BA alternating at twice the modulation frequency, when it reaches D, the vector BA will have reversed and the resultant will be at E. We have thus superposed an amplitude modulation equal to BA, corresponding to side bands $\frac{AB}{2}(\omega_0 + 2\omega_m)$ and $\frac{AB}{2}(\omega_0 - 2\omega_m)$, where $AB = \frac{OA}{2}(1 - \cos \Phi)$.

In Fig. 2 Φ has been made still larger, viz. $\pi/2$ and in this case our rough approximation would obviously give the five components :—

$$\frac{A_0}{2} \cos \omega_0 t + \frac{A_0}{2} \cos (\omega_0 + \omega_m)t - \frac{A_0}{2} \cos (\omega_0 - \omega_m)t + \frac{A_0}{4} \cos (\omega_0 + 2\omega_m)t + \frac{A_0}{4} \cos (\omega_0 - 2\omega_m)t.$$

Now although the addition of the last two terms causes the resultant to swing from

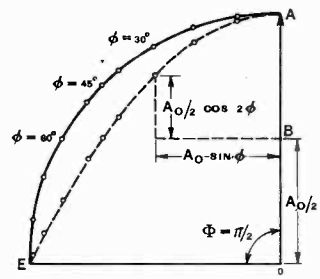

Fig. 2.—*The construction is shown for* $\phi = 30°$.

OA to OE, it does not agree strictly with equation (2). Instead of following the circular arc it follows the curve shown. A closer approximation would be obtained by making the carrier amplitude somewhat larger than $A_0/2$ thus raising the whole curve. To get accurate agreement, however, the amplitudes of the components must be obtained from a table of Bessel functions,

www.americanradiohistory.com

and additional terms of frequencies $\omega_0 \pm 3\omega_m$ $\omega_0 \pm 4\omega_m$, etc., added as Φ is increased. In Fig. 3 the ordinates of the curves give the correct amplitudes of the various components for four values of Φ. It will be seen how the amplitude of the carrier decreases as Φ increases and vanishes entirely when Φ is about 2.5 radians. When $\Phi = 4$ radians the 2nd, 3rd, 4th and 5th side bands

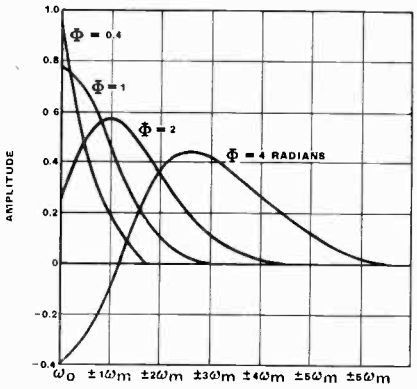

Fig. 3.

are all greater than the 1st and the 3rd is greater than the carrier. This is illustrated in Fig. 4 which shows the relative amplitudes of the carrier and side bands.

These results for a pure single-frequency sinusoidal modulation are equally applicable to frequency modulation since $\Phi = m\omega_0/\omega_m$ (compare formulae (2) and (3 a). In phase-angle modulation the frequencies of the side bands depend only on ω_m and their amplitudes on Φ; in frequency modulation this must also be the case, but since $\Phi = m\omega_0/\omega_m$ the amplitudes of the side bands for a given

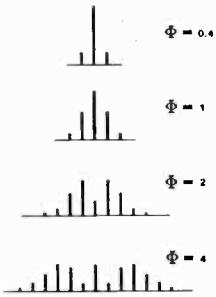

Fig. 4.—*Amplitudes of carrier and side-bands.*

$m\omega_0$ depend also upon the modulation frequency.

In his 1922 paper[1] Carson said concerning frequency modulation: "This type of modulation inherently distorts without any compensating advantages whatsoever. Superiority, however, has been claimed on the alleged ground that, since the amplitude is constant, transient disturbances are minimised. This claim is seen to be quite invalid when the real significance of frequency modulation is analysed, and no such superiority exists." He also said concerning the belief that frequency modulation "makes possible the transmission of signals by a narrower range of transmitted frequencies. This belief is erroneous; the suggestion is, however, quite ingenious and the reasoning on which the supposed advantage is based is very plausible, and indeed requires some mathematical analysis before its incorrectness can be satisfactorily established."

That was eighteen years ago; it would be interesting to know if Carson is still of the same opinion. G. W. O. H.

REFERENCES

1. J. R. Carson. *Proc. Inst. Rad. Eng.*, Vol. 10, p. 57, 1922. "Notes on the Theory of Modulation."

2. H. Roder. *Telefunken-Zeitung*, Vol. 53, p. 48, 1929. "Ueber Frequenzmodulation."

3. T. L. Eckersley. *Experimental Wireless* (now *Wireless Engineer*), Vol. 7, p. 482, 1930. "Frequency Modulation and Distortion."

4. C. H. Smith. *Experimental Wireless* (now *Wireless Engineer*), Vol. 7, p. 609, 1930. "Note on the Relationships existing between Radio Waves Modulated in Frequency and in Amplitude."

5. B. van der Pol. *Proc. Inst. Rad. Eng.*, Vol. 18, p. 1194, 1930. "Frequency Modulation."

6. W. Loest. *Zeits. f. H.T.*, Vol. 36, p. 188, 1930. "Phasen modulation."

7. W. Runge. *E.N.T.*, Vol. 7, p. 488, 1930. "Untersuchungen an Amplituden und Frequenz modulierten Sendern."

8. H. Roder. *Proc. Inst. Rad. Eng.*, Vol. 19, p. 2145, 1931. "Amplitude, Phase, and Frequency Modulation."

9. E. H. Armstrong. *Proc. Inst. Rad. Eng.*, Vol. 24, p. 689, 1936.

10. M. G. Crosby. *Proc. Inst. Rad. Eng.*, Vol. 25, p. 472, 1937, and Vol. 27, p. 126, 1939.

11. E. C. Metschl, *E.T.Z.*, p. 1357, Nov., 1939. "Wesen und Anwendung der Ampl. Phasen und Freq. modelung."

See also the letter on p. 353 of this issue in which several other references are given.

www.americanradiohistory.com

Feedback*

By E. K. Sandeman

THE idea of using positive feedback, or reaction as it was then called, to increase the magnification of a radio frequency amplifier, appeared comparatively soon after the discovery of the three electrode valve. The advantages to be gained from the sacrificing of amplification by the application of negative feedback were not appreciated until much later. Most of the credit for pointing out these advantages belongs to two members of the Bell Telephone Laboratories, H. S. Black and H. Nyquist.

The practical achievements of negative feedback up to date are many and various. At one end of the scale it has contributed stable precision instruments for measuring very small varying or alternating currents and voltages; at the other end of the scale it has simplified the problem of building high-efficiency radio transmitters delivering hundreds of kilowatts to the aerial. It has made possible the construction on an economic basis of single core cable circuits capable of carrying hundreds of speech channels, while the development of television has been considerably facilitated by its use.

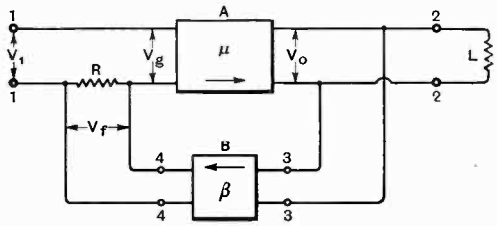

Fig. 1.

In order to introduce the subject as simply as possible a circuit will be discussed which represents rather an ideal condition in that it contains an amplifier with an infinite input impedance or at least an input impedance so high that it can be regarded as infinite in comparison with the rest of the circuit. After examining the two more practical examples which follow, engineers will have little difficulty in evolving the relations for any practical embodiment of this circuit.

Consider an amplifier in which the output is not a faithful enlargement of the input. The difference between the output and a magnified replica of the input of equal amplitude to the output can be referred to loosely as distortion products.

Suppose further that in the circuit of Fig. 1 the impedance level at all points is finite and resistive, i.e. of zero angle, except the input impedance of the amplifier A which is infinite.

If we call the input voltage V_g, the amplification and distortion are defined by saying that the output voltage V_0 is $\mu V_g + D$ where μ is the voltage amplification of the amplifier including the effect of the load L across terminals 2, 2, and D is the complex system of voltages representing the distortion products.[1]

Suppose now we feed back through the network B a fraction β of the output voltage in series with the input circuit as shown in Fig. 1, giving rise to a feedback voltage $V_f = \mu\beta V_g + \beta D$. (The network B is assumed to contain no commutation and to introduce no phase shift.)

In order to provide the voltage V_g, a voltage $V_1 = V_g - V_f$ is required (assuming in accordance with the usual convention, that V_f aids V_1 when $\theta = 0$) i.e. that positive feedback occurs).

$$\therefore \quad V_1 = V_g - \mu\beta V_g - \beta D$$

$$\therefore \quad V_g\,(1 - \mu\beta) = V_1 + \beta D$$

$$\therefore \quad V_g = \frac{V_1 + \beta D}{1 - \mu\beta}$$

and the output voltage $V_0 = \mu V_g + D$

$$\therefore \quad V_0 = \frac{\mu V_1}{1 - \mu\beta} + \frac{\mu\beta D}{1 - \mu\beta} + D$$

$$= \frac{\mu V_1}{1 - \mu\beta} + \frac{D}{1 - \mu\beta}$$

It is to be noted that in the above case $\mu\beta$

* MS. accepted by the Editor, April, 1940.

[1] The symbol μ is used throughout to signify a vector operator of magnitude $|\mu|$ and angle θ.

www.americanradiohistory.com

is the voltage amplification round the feedback path.

This quantity is spoken of as the loop amplification vector, or loosely but conveniently, as the loop gain (gain should strictly be expressed in dB, of course).

These relations are discussed by H. S. Black in an aritcle, "Stabilised Feedback Amplifiers," in the *Bell System Technical Journal* for January, 1934, page 1. He gives there a useful chart of the value of $1 - \mu\beta$ as a function of $|\mu|\beta$ and θ.

When $\theta = 0$ these are the conditions for positive feedback: the condition for negative feedback when $\theta = 0$ is obtained by reversing the sign of $\mu\beta$.

It is to be noted that the effective amplification is $\frac{V_0}{V_1}$, and when the feedback is negative, neglecting distortion products this is a fraction $\frac{1}{1 - \mu\beta}$ of the amplification without feedback.

The distortion product D has also been reduced in the same proportion, while the phase shift through the amplifier has been reduced from θ to $\theta - \tan^{-1}\left(\frac{\mu\beta \sin\theta}{1 + \mu\beta\cos\theta}\right)$.

Note that when $\mu\beta$ is very large compared with unity, V_0 tends towards

$$\frac{\mu}{\mu\beta}V_1 + \frac{D}{\mu\beta} = \frac{1}{\beta}V_1 + \frac{D}{\mu\beta}$$

The important point to note is that the amplification tends to be equal to $1/\beta$, and therefore independent of variations in μ. The first effects of negative feedback are therefore to reduce or substantially eliminate:

(i) Distortion products, such as combination tones and harmonics due to valve non-linearity.

(ii) Distortion products, such as noise, e.g. due to anode noise in valves, hum picked up from A.C. heating of filaments, cross talk from other amplifiers, etc.

(iii) Distortion due to variation of the amplification factor with frequency.

(iv) Change of amplification due to change of μ with time, e.g. due to battery or supply mains variation.

(v) Phase distortion.

The second important effect of feedback is to modify the input and output impedances of the amplifier. It is now useful to distinguish two types of feedback: parallel feedback, and current feedback, as indicated in Fig. 2 *a* and *b* respectively.

Input Impedance with Parallel Feedback

In considering this problem, it is simplest to think of the amplifier as amplifying current amplitudes instead of voltage amplitudes.

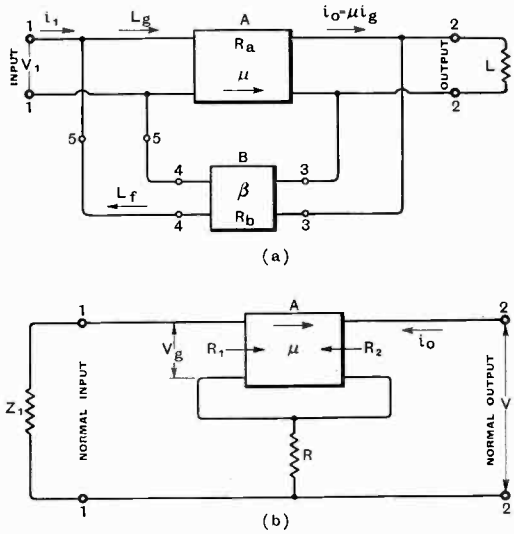

Fig. 2.

Referring to Fig. 2*a* the amplifier characteristics are such that when the amplifier A is terminated in the load L in parallel with the impedance presented by network B at terminals 3, 3 (the circuit being broken at terminals 5, 5 and terminals 4, 4 being closed through an impedance R_a equal to the input impedances of the amplifier A) a current i_g entering the amplifier A gives rise to a current at its output $i_0 = \mu i_g$ which divides between L and B in proportion to their conductances. Network B, which has no commutations or phase shift in it, is such that when terminated at 4, 4 in an impedance R_a, it delivers out of terminals 4, 4 a current $i_f = \beta$ times the current i_0.[2]

R_b is the impedance looking into terminals 4, 4 of network B when terminals 3, 3 are terminated in an impedance equal to that of

[2] Evidently β has, concealed in it, the bridging and transition losses at input and output, of network B in addition to the attenuation of B.

www.americanradiohistory.com

load L in parallel with the output impedance of the amplifier.

Assuming the amplifier A to have been made passive (i.e. non-amplifying) without affecting its input and output impedance, the input impedance looking into terminals 1, 1 is evidently $\frac{R_a R_b}{R_a + R_b}$.

If now a current i_g flows into the amplifier A, a current $i_0 = \mu i_g$ flows out of the amplifier and a current $i_f = \mu\beta i_g$ flows out of terminals 4, 4 and therefore either out of terminals 1, 1 or into the amplifier A.

In either case $i_g = \frac{R_b}{R_a + R_b} i_1 + i_f$ where i_1 is the current flowing into terminals 1, 1.

$$\therefore \quad i_1 = \frac{R_a + R_b}{R_b} i_g (1 - \mu\beta).$$

The voltage across the input of the amplifier is $V_1 = i_g R_a$. Hence the input impedance $= \frac{V_1}{i_1} = \frac{R_a R_b}{R_a + R_b} \cdot \frac{1}{1 - \mu\beta}$. Here $\mu\beta$ is the current amplification round the feedback path.

The sign before $\mu\beta$ shows that this case is one of positive feedback when $\theta = 0$. By inserting a commutation either internally in A or in B the case of negative feedback at $\theta = 0$ is obtained.

A similar analysis shows that the output impedance is also divided by $1 \pm \mu\beta$ by the application of parallel feedback.

By breaking the loop feedback circuit at a point of zero angle impedance looking both ways it is easy to see that the current loop amplification is equal to the voltage loop amplification and *vice versa*. The distinction is therefore only a convenient convention for simplifying the analysis.

Output Impedance with Current Feedback

Referring to Fig. 2*b*, μ is the relation between V_g, the input voltage to A and V_{0c} the open circuit voltage at the output of A. Z_1 is the input impedance facing terminals 1, 1. R_1 and R_2 are respectively the input and output impedances of A. R is the current feedback impedance.

To determine the impedance looking into terminals 2, 2 assume that a voltage V applied across terminals 2, 2 causes a current i to flow into the output of the amplifier returning via R in parallel with Z_1 and R_1 in series. The voltage appearing across R is evidently $\frac{R(R_1 + Z_1)}{R + R_1 + Z_1} i$ and the voltage $V_g = \frac{R_1}{R_1 + Z_1} \cdot \frac{R(R_1 + Z_1)}{R + R_1 + Z_1} i = \frac{RR_1}{R + R_1 + Z_1} i_1$, so that the internal e.m.f. in the output of A is $\frac{RR_1\mu}{R + R_1 + Z_1} i$ and the total e.m.f. in the output mesh is $V - \frac{RR_1\mu}{R + R_1 + Z_1} i$ whence

$$i = \frac{1}{\frac{R(R_1 + Z_1)}{R + R_1 + Z_1} + R_2} \left[V - \frac{RR_1\mu}{R + R_1 + Z_1} i \right]$$

$$\therefore \left[\frac{R(R_1 + Z_1)}{R + R_1 + Z_1} + R_2 \right] i = V - \frac{RR_1\mu}{R + R_1 + Z_1} i$$

Hence the output impedance

$$= \frac{V}{i} = \frac{R(R_1 + Z_1)}{R + R_1 + Z_1} + R_2 + \frac{RR_1\mu}{R + R_1 + Z_1}$$

$$= \left[\frac{R(R_1 + Z_1)}{R + R_1 + Z_1} + R_2 \right] \times \left[1 + \mu \frac{\frac{RR_1}{R + R_1 + Z_1}}{\frac{R(R_1 + Z_1)}{R + R_1 + Z_1} + R_2} \right]$$

$$= \left[\frac{R(R_1 + Z_1)}{R + R_1 + Z_1} + R_2 \right] \times \left[1 + \mu \frac{RR_1}{R(R_1 + Z_1) + R_2(R + R_1 + Z_1)} \right]$$

$$= \left[\begin{array}{c} \text{Output impedance} \\ \text{with } A \text{ passive} \end{array} \right] [1 + \mu\beta]$$

where $\mu\beta$ is the loop voltage amplification with terminals 2, 2 shorted.

The sign before $\mu\beta$ shows that this case is one of negative feedback where $\theta = 0$. By inserting a commutation in A the case of positive feedback at $\theta = 0$ is obtained.

A similar analysis shows that the input impedance is also multiplied by $1 \pm \mu\beta$ by the application of current feedback.

Proof that the loop voltage amplification

$$= \mu \frac{RR_1}{R(R + Z_1) + R_2(R + R_1 + Z_1)}.$$

Assume 1 volt applied at the input of A: i.e. $V_g = 1$.

Then the internal e.m.f. in the output of $A = \mu$. The impedance facing the output of

www.americanradiohistory.com

A with terminals 2, 2 shorted is

$$\frac{R(R_1 + Z_1)}{R + R_1 + Z_1} = A, \text{ say.}$$

The voltage across R is $\frac{A}{A + R_2}\mu$ and the voltage across R_1 is $\frac{R_1}{R_1 + Z_1} \cdot \frac{A}{A + R_2}\mu$ and thus is evidently equal to the loop voltage amplification.

Substituting for A, the loop voltage amplification is

$$= \frac{RR_1}{R + R_1 + Z_1} \cdot \frac{1}{\frac{R(R_1 + Z_1)}{R + R_1 + Z_1} + R_2}\mu$$

$$= \frac{RR_1}{R(R_1 + Z_1) + R_2(R + R_1 + Z_1)}\mu \quad \text{Q.E.D.}$$

Summary of Factors by which input and output impedances are multiplied :

	Feedback Positive when $\theta = 0$	Feedback Negative when $\theta = 0$
Parallel Feedback .	$\frac{1}{1 - \mu\beta}$	$\frac{1}{1 + \mu\beta}$
Current Feedback .	$1 - \mu\beta$	$1 + \mu\beta$

It now appears that the first circuit considered constitutes a third type : analysis will show, however, that the modification of input and output impedances is the same as for current feedback.

It is evident that where an amplifier has two input circuits with infinite attenuation between them, feedback into one cannot affect the impedance looking into the other. A simple case of this discussed below is the cathode follower valve.

In the case of an ordinary amplifier, simple bridge circuits can be devised which have the two-fold effect of preventing the modification of the input and output impedances of the amplifier in the way described above and also of eliminating any phase shift round the loop path due to reactances introduced into the feedback path due to the input or output circuits.

Fig. 3 shows a circuit of an amplifier with bridges for this purpose in both input and output circuits. The bias arrangements for the output valve are omitted for clearness.

One of the arms of the output bridge is constituted by R_0 the anode resistance of the valve, the bridge being balanced so that $R_1/R_0 = R_2/R_3$.

The effect of phase shift round the loop must now be considered.

In practice every amplifier is a band pass structure. In the case of D.C. amplifiers the band extends down to zero frequency, but if we consider the case where this is not so, we shall include this case.

Fig. 4 shows the amplification and phase shift characteristics of a hypothetical resistance capacitance or transformer coupled amplifier. (The feedback path is assumed to introduce no phase shift and to have an attenuation ratio β, constant and independent of frequency.)

It is necessary here to establish a convention for phase shift. If the loop gain is $-\mu\beta$ the phase shift will be said to be θ and the absolute phase shift to be $\theta - 180°$.

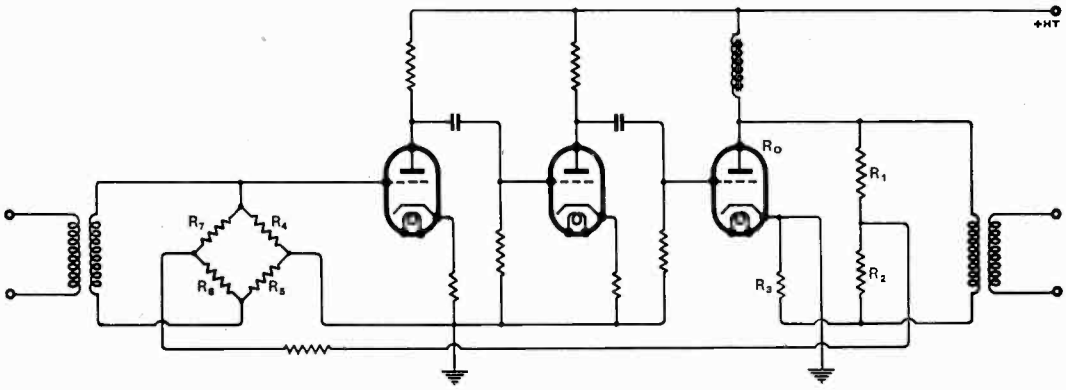

Fig. 3.

www.americanradiohistory.com

The phase shift is shown on the unusual convention (but usual in work on feedback) that lag is a positive angle. It will be seen that in the middle of the band a frequency f_0 occurs at which the phase shift θ is zero. At this frequency the feedback constitutes either pure negative or pure positive feedback according to the sense of commutation. If this sense is such that pure negative

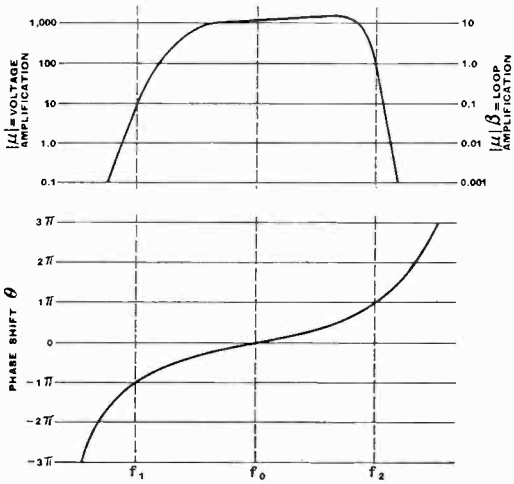

Fig. 4.

feedback occurs at frequency f_0, then it is usual to say that negative feedback has been applied. At frequencies f_1 and f_2 at which θ reaches respectively $-$ and $+$ 180°, pure positive reaction occurs, and if at these frequencies the loop amplification $\mu\beta$ is greater than unity, in the case shown, the amplifier will sing, the oscillation building up to such an amplitude that the loop amplification falls to unity. It is hardly necessary to explain that the gain of an overloaded amplifier falls below its value when not overloaded.

We can now establish a simple rule for stability in negative feedback amplifiers: *the loop amplification at the frequency or frequencies at which loop phase shift reaches* $\pm\pi$ *shall not exceed unity.*[3] These frequencies will be called the π frequencies, and the attenuation at these frequencies, the π attenuation. Strictly, this condition is sufficient but not necessary. This point is discussed below.

In the case of Fig. 4 the amplification μ at f_1 is 10, while at f_2 it is 100. This means that for stability the value of β must be $\frac{1}{100}$ or less. Assuming the marginal condition of stability to have been chosen $\left(\text{i.e. } \beta = \frac{1}{100}\right)$ then at f_0, $\mu\beta = 1{,}000 \times \frac{1}{100} = 10$, in other words, the maximum permissible value of loop amplification is equal to the fall in amplification from its maximum value (usually occurring in the neighbourhood of f_0) to its value at the frequency at which the phase shift reaches π. When there are two frequencies (respectively at each end of the pass band) at which the phase shift reaches π evidently the one which prescribes the lower value of loop gain provides the determining limitation.

When amplifications are expressed in voltage ratios, the fall in amplification is evidently expressed as a ratio of the maximum amplification to the amplification at which $\theta = \pi$ and when the amplifications are expressed in decibels the fall is expressed as the difference of the gains.

In the case cited, where $\beta = \frac{1}{100}$ the curve of Fig. 4 represents the value of $|\mu\beta|$ when the right-hand scale is used, which has ordinates equal to $\frac{1}{100}$ of the value of μ portrayed by the left-hand scale. The value of $\mu\beta$ is now represented by the two curves of Fig. 4, since, as no phase shift has been introduced in the feedback path, the loop phase shift is equal to the phase shift through the amplifier.

The value of $\mu\beta$ can be portrayed in another way. The case for a system commutated for negative feedback is shown in Fig. 5*a*, where the contour drawn on the complex plane is formed by plotting the value of $\mu\beta$ at all frequencies and joining the tips of the resultant vectors.

In consistence with the condition for stability formulated above, it appears clear that if the contour embraces the point $1(\theta = 0)$ as shown in Fig. 5*b*, the system will sing because the loop gain is greater than

[3] It is assumed that the phase shift at f_0 is zero regardless of whether the circuit is commutated for positive or negative feedback.

www.americanradiohistory.com

unity at a frequency at which the absolute phase shift, according to ordinary conventions, is zero.

It was formerly believed that if at any frequency the absolute phase shift is zero and the loop amplification greater than unity, the system must sing. Nyquist[4] has shown, however, that as long as the contour described according to the above convention does not embrace the point 1 ($\theta=0$), the system is stable: he gives rules for determining whether a contour embraces the point 1 ($\theta=0$) in certain cases where this is not immediately obvious. The system of Fig. 5*c* is stable although the amplification is greater than unity at a frequency at which the absolute phase shift is zero.

This system has the odd characteristic that if the amplification is either increased *or reduced* sufficiently, singing will result. Such a system has been built and was found to be stable, but its practical applications have so far been almost nil on account of the difficulty of usefully modifying an unstable circuit of the type shown for instance at 5*b* to a stable circuit as shown at 5*c*.

The chief problem in applying feedback is that of stability, and in practice it is usual to think in terms of systems of the type shown in Figs. 5*a* and 5*b*, which, incidentally, have a single pass band only.

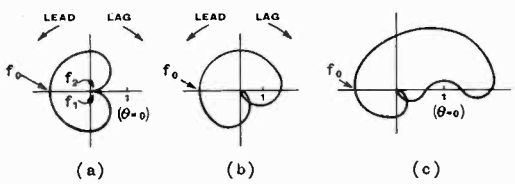

Fig. 5.

It may be well to interpolate here that the term "phase shift" used in a negative feedback circuit usually refers to the increase of lag or lead with deviation of frequency from f_0 the frequency at which pure negative or positive reaction is obtained according to the sense of commutation.

Similarly the word attenuation refers to the decrease of amplification with deviation of frequency from f_0.

[4] H. Nyquist, "Regeneration Theory," *Bell S. Tech. Journ.*, January, 1932.

The limitations on loop gain, which are imposed by the requirement of stability, are dependent on a variety of factors, chief among which are the phase shift at infinite frequency and at zero frequency and the attenuation when $\theta = \pm \pi$. This will be called the π attenuation.

It is a fact, perhaps not obvious, that if the loop phase shift at infinite and zero frequency is not more than 180° the system can never sing when negative feedback is applied, however high the loop amplification. This is because if 180° phase shift does occur at zero and/or infinite frequency, the loop attenuation will also be infinite at those frequencies, while if 180° phase shift is never reached, positive reaction can never occur. Equally if there is zero phase shift (and therefore $-\pi$ absolute phase shift with negative feedback) at zero frequency, no singing can be introduced at the low frequency end.

It is perhaps pertinent to remark here that when a system sings it starts to sing at the frequency at which the absolute phase shift round the loop is zero. It does not necessarily continue to oscillate at this frequency, since as the amplitude of the oscillation builds up the loop phase shift may change owing to non-linearity of the elements, while in general the oscillation must be regarded as a relaxation oscillation. In practice, however, it is usually found that the oscillation frequency is very close to the frequency of zero absolute phase shift.

The magnitude of the π attenuation is determined by the type or types of circuit contributing phase shift and attenuation, by their number, and by the relative locations of their phase shift and attenuation curves in the frequency spectrum.

The magnitude of the π attenuation can be considerably increased by staggering the cut-off frequencies of the different circuits contributing phase shift, that is by making them occur at frequencies as wide apart as possible.

The following treatment due to Mr. C. G. Mayo shows the point very clearly.

Consider an amplifier with feedback which contains three resistance capacity coupled circuits of conventional type in the total loop path. Valves of internal resistance G_1, G_2, G_3 feed through condensers C_1, C_2 and C_3 into loads R_1, R_2 and R_3. The loss ratio introduced by these circuits with relation to

www.americanradiohistory.com

the loss ratio at infinite frequency is :

$$r = \frac{R_1}{R_1 + G_1 - j\frac{1}{C_1\omega}} \cdot \frac{R_2}{R_2 + G_2 - j\frac{1}{C_2\omega}} \cdot \frac{R_3}{R_3 + G_3 - j\frac{1}{C_3\omega}} \cdot \frac{(R_1+G_1)(R_2+G_2)(R_3+G_3)}{R_1 \,.\, R_2 \,.\, R_3}$$

Putting $R_1 + G_1 = A_1$, $R_2 + G_2 = A_2$, etc.

$$r = \frac{A_1 A_2 A_3}{A_1 A_2 A_3 - \frac{A_1}{C_2 C_3 \omega^2} - \frac{A_2}{C_1 C_3 \omega^2} - \frac{A_3}{C_1 C_2 \omega^2} + j\left[\frac{1}{C_1 C_2 C_3 \omega^3} - \frac{A_2 A_3}{C_1 \omega} - \frac{A_1 A_3}{C_2 \omega} - \frac{A_1 A_2}{C_3 \omega}\right]}$$

The phase angle of r will be zero or π when the reactive term is zero, i.e. when

$$\omega^2 = \frac{1}{A_1 A_2 C_1 C_2 + A_1 A_3 C_1 C_3 + A_2 A_3 C_2 C_3}$$

$\frac{\omega}{2\pi}$ is the π frequency since at $\omega = \infty$ the phase shift is zero, and at $\omega = 0$ the phase shift is 270°. Whence at the π frequency, substituting in the expression for r the value of ω above, the π attenuation ratio,

$$r = \frac{A_1 A_2 A_3}{A_1 A_2 A_3 - \left[\frac{A_1}{C_2 C_3} + \frac{A_2}{C_1 C_3} \frac{A_3}{C_1 C_2}\right] \times [A_1 A_2 C_1 C_2 + A_1 A_3 C_1 C_3 + A_2 A_3 C_2 C_3]}$$

$$= \frac{A_1 A_2 A_3}{A_1 A_2 A_3 - A_2 A_1^2 \frac{C_1}{C_3} - A_1^2 A_3 \frac{C_1}{C_2} - A_1 A_2 A_3 - A_1 A_2^2 \frac{C_2}{C_3} - A_1 A_2 A_3 - A_2^2 A_3 \frac{C_2}{C_1} - A_1 A_2 A_3 - A_1 A_3^2 \frac{C_3}{C_2} - A_2 A_3^2 \frac{C_3}{C_1}}$$

$$= -\frac{1}{2 + \frac{A_1}{A_3} \cdot \frac{C_1}{C_3} + \frac{A_1}{A_2} \cdot \frac{C_1}{C_2} + \frac{A_2}{A_3} \cdot \frac{C_2}{C_3} + \frac{A_2}{A_1} \cdot \frac{C_2}{C_1} + \frac{A_3}{A_2} \cdot \frac{C_3}{C_2} + \frac{A_3}{A_1} \cdot \frac{C_3}{C_1}}$$

$$= -\frac{1}{2 + \frac{A_2 C_2 + A_3 C_3}{A_1 C_1} + \frac{A_1 C_1 + A_3 C_3}{A_2 C_2} + \frac{A_1 C_1 + A_2 C_2}{A_3 C_3}}$$

If the cut-off frequencies are all equal then

$$A_1 C_1 = A_2 C_2 = A_3 C_3 \text{ and } r = \frac{1}{2+2+2+2} = \frac{1}{8}$$

If, however, $A_1 C_1 = A_2 C_2 = 10\, A_3 C_3$, then

$$r = \frac{1}{2 + \frac{11}{10} + \frac{11}{10} + 20}$$

$$= \frac{1}{24} \text{ approximately.}$$

In other words, by staggering one of the circuits so that it cuts off at a frequency ten times as high as the other two, an increase in the π attenuation of nearly ten db. is obtained with a resultant increase in permissible loop gain.

The maximum loop amplification would, therefore, be just under 24 (voltage ratio). It is hardly necessary to mention that a feedback amplifier would not be operated without a margin of safety. If, for instance, this were 6 db. the permissible loop amplification would only be 12. It should be pointed out that at the π frequency in a system with negative reaction, positive reaction occurs, so that distortion products in that region are *increased* by the factor $F = \frac{1}{1 - |\mu\beta|}$. If the factor of safety is 6 db., $\mu\beta$ at the π frequency $= \frac{1}{2}$ and $F = 2$, if the factor of safety is 1 db., $\mu\beta = 0.89$ and $F = 9.0$, and so on. The importance of an adequate stability margin is, therefore, two-fold.

Similar arguments apply to circuits introducing increase of attenuation and increase of lag with increase of frequency, such as are constituted by the effects of shunt capacity across the circuit due to valve input and output capacities.

In all cases the π attenuation can be increased by staggering the circuit cut-offs.

It is quite a simple matter in practice to build one resistance capacity coupling with a drop of 6 db. at 20 c/s and another with a drop of 6 db. at 1 c/s or even lower. I have chosen 6 db. drop as the point defining cut-off. Evidently I might easily have chosen any other value of db. for comparison purposes. In this way it is usually found possible to render low frequency phase shift comparatively innocuous from the point of view of introducing singing, since most of

www.americanradiohistory.com

the low frequency phase shift can be relegated to frequency regions where no useful frequency components occur. In cases where it is necessary to amplify down to zero frequency no low frequency phase shift occurs and the problem does not arise.

Phase shift at the high frequency end of the spectrum is usually a much more serious problem, because it is nearly always impossible to stagger the cut-off frequencies of the several circuits concerned in any ratio sufficiently large to be useful. The best thing to do in practice, is to make the cut-off of all circuits as high as possible, and then to introduce a circuit to increase the π attenuation. Such a circuit must be one which introduces attenuation at the π frequency while introducing a minimum of lag: at the same time it must not introduce appreciable lag inside the range of transmitted frequencies, since this would reduce the distortion reduction.

Fig. 6 shows the attenuation and phase shift characteristics of a suitable circuit; as shown, it consists of a shunt made up of a condenser in series with a resistance.

These are generalised characteristics[5] plotted to a universal frequency scale. All frequencies are represented by their ratio to the frequency at which the reactance of the shunt condenser equals the impedance of the circuit across which it is bridged. The parameter "a" defines the ratio of the resistance in series with the condenser to the circuit impedance. The effect of this circuit is to introduce an attenuation which, as the frequency is increased, increases asymptotically to a limiting value, and a phase shift which rises to a maximum just about the arbitrary unit frequency as defined by the scale and then falls away asymptotically to zero.

In order that the circuit may be of appreciable use it is desirable to fit the range of frequencies where the lag rises to a maximum between the highest useful frequency to be transmitted and the π frequency. This means that it is desirable that the π frequency should be at least 10 times the top frequency, e.g. to transmit a range up to 10,000 c/s a π frequency of 100 kc/s is required. It will be appreciated that if appreciable lag is introduced in the neighbourhood of the π frequency, the π frequency will shift to a lower frequency where the attenuation introduced by the existing circuit is lower, and some of the extra attenuation introduced at the π frequency will be lost. For this reason it is generally better to err on the side of increasing the lag at the wanted frequencies.

Until someone has developed a simple technique of doing it, I do not advocate any attempt at evading the effect of the phase shift by converting the attenuation phase shift vector diagra mto the form shown in Fig. 5c. If carried out the circuit would be entirely stable, provided the loop gain were kept up. If for any reason, the loop gain fell appreciably the circuit would sing.

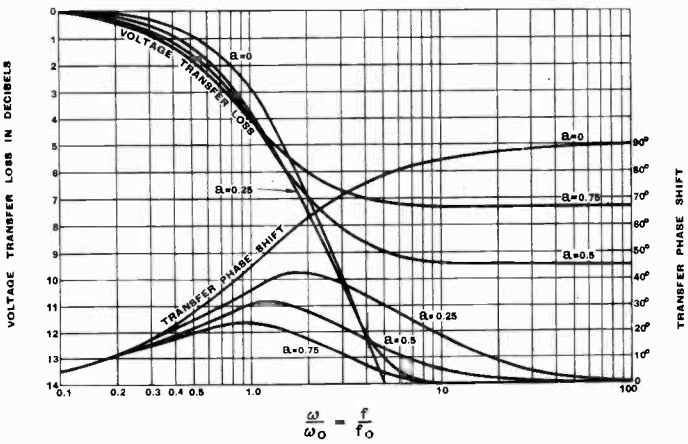

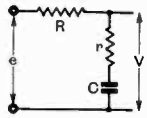

$$r = aR\,;\quad R = \frac{1}{C\omega_0}\,;\quad C = \frac{1}{R\omega_0}\,;$$

$$\frac{V}{e} = \frac{\sqrt{\left[a(1+a) + \frac{\omega_0^2}{\omega^2}\right]^2 + \frac{\omega_0^2}{\omega^2}}}{(1+a)^2 + \frac{\omega_0^2}{\omega^2}}$$

$$\tan^{-1}\frac{\frac{\omega_0}{\omega}}{a(1+a) + \frac{\omega_0^2}{\omega^2}}\,;$$

Voltage transfer loss $= 20 \log_{10} V/e$.

Fig. 6.—*Circuit for increasing π attenuation with generalised attenuation and phase shift characteristics.*

[5] For definition and method of deriving generalised characteristics see "Generalised Characteristics of Linear Networks," by E. K. Sandeman, *Electrical Communication*, Oct. 1936.

www.americanradiohistory.com

Discontinuities in Amplitude Characteristics

It is self-evident that if an amplifier has complete limitation of amplitude characteristics above a certain amplitude and is driven into limitation so introducing harmonics, no amount of feedback can reduce these harmonics since the system cannot transmit the correcting frequencies fed back in opposite phase. In general, any kind of discontinuity in amplitude characteristic cannot be corrected while limitation effects can be corrected only in inverse proportion to their sharpness.

Feedback of Rectified Radio Frequency

It requires no proof to show that the complete system comprised by the speech input circuits to a radio transmitter, its modulator and high-frequency amplifiers, and a detector delivering the original audio frequency at its output can be considered as one example of an amplifier.

If the output of such an amplifier is fed back to its input the system obeys all the laws given above for predicting its performance in terms of its amplitude, gain and phase characteristics.

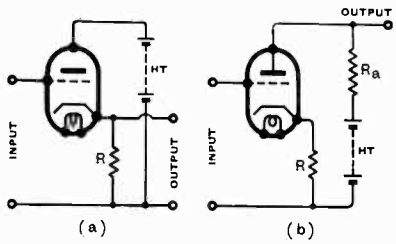

Fig. 7.

The only point of interest which really arises is how radio frequency circuits affect the gain and phase characteristics of the overall audio frequency path.

I am only going to consider here radio frequency systems having characteristics symmetrical about the carrier frequency. For such systems the variation of audio frequency response is a replica of the variation of the response of the R.F. circuits to the side bands: each audio frequency is amplified or attenuated relatively to other frequencies by the same amount that the pair of side bands which "carry" that audio frequency are amplified or attenuated with regard to other pairs of sidebands. This is so well known that it requires no proof. In a system free from phase distortion (i.e. having a phase shift characteristic linear with frequency) the audio frequency phase shift is equal to the upper sideband phase shift minus the phase shift at the carrier frequency.

The proof of this is very simple, as follows:

The amplitude modulated wave

$$(1 + m \sin vt) \sin ct$$

$$= \sin ct + \frac{m}{2} \cos (c - v)t - \frac{m}{2} \cos (c + v)t$$

where c and v are respectively the angular frequencies of carrier and modulating frequency.

If the wave passes through a system which shifts the carrier by ϕ_0 lag, the lower sideband by $\phi_0 - \alpha$ lag, and the upper sideband by $\phi_0 + \alpha$ lag without changing their amplitudes, the emergent wave is

$$\sin \overline{ct + \phi_0} + \frac{m}{2} \cos \overline{ct - vt + \phi_0 - \alpha}$$
$$+ \frac{m}{2} \cos \overline{ct + vt + \phi_0 + \alpha}$$

Preserving the unusual convention that lag is positive, this becomes

$$= \left[\sin ct + \frac{m}{2} \cos \overline{ct - vt - \alpha} + \frac{m}{2} \cos \overline{ct + vt + \alpha} \right] \text{ (at angle } \phi_0)$$

$$= \sin ct \, [1 + m \sin \overline{vt + \alpha}] \text{ (at angle } \phi_0)$$

$$= [1 + m \sin \overline{vt + \alpha}] \sin \overline{ct + \phi_0}$$

That is the carrier is shifted by ϕ_0 and the audio frequency or modulating frequency by the upper sideband phase shift minus the carrier phase shift (i.e. by α).

Examples of Practical Feedback Circuits

The Cathode Follower

Fig. 7*a* shows the circuit which has been called the Cathode Follower, presumably because the cathode follows the grid in its excursions about earth potential. It is, however, not to be confused with Fig. 7*b*.

Conventions

g_m = mutual conductance of valve.
R_0 = A.C. resistance of valve.
μ_v = $R_0 g_m$ = voltage amplification factor of valve.
μ = forward amplification factor neglecting effect of feedback.
β = attenuation ratio of feedback path.
μ_e = effective overall amplification factor of circuit.

www.americanradiohistory.com

Evidently $\mu = \mu_v \dfrac{R}{R + R_0}$ and $\beta = -1$

$$\mu_e = \frac{\mu}{1 - \mu\beta} = \frac{\mu_v \dfrac{R}{R + R_0}}{1 + \mu_v \dfrac{R}{R + R_0}} = \frac{\mu_v R}{R_0 + (1 + \mu_v)R}$$

Evidently μ_e can never exceed unity.

The output impedance of the circuit (is R in parallel with R_0, divided by $1 - \mu\beta$)

$$= \frac{\dfrac{RR_0}{R + R_0}}{1 + \mu_v \dfrac{R}{R + R_0}} = \frac{R_0}{1 + \dfrac{R_0}{R} + \mu_v}$$

$$= \frac{R}{\dfrac{R}{R_0} + 1 + \dfrac{R}{R_0}\mu_v}$$

It is evident that since the plate is at earth potential normal Miller capacitance is absent : the static grid-anode capacitance is, however, effective between grid and earth. The grid-cathode capacitance is reduced by the following action of the cathode in the ratio of the voltage of the grid to cathode, to the voltage of the grid to earth.

The factor by which the capacitance is multiplied is, therefore, $1 - \mu_e$.

In the circuit of Fig. 7b

$$\mu = \mu_v \frac{R_a}{R_a + R + R_0} \quad \text{and} \quad \beta = -\frac{R}{R_a}$$

μ_e can then be calculated as above, while the *output impedance* is

$$\frac{R_a(R_0 + R)}{R_a + R_0 + R} \cdot \frac{1}{1 - \mu\beta}$$

Input Impedance of Triode

The formula established above for the input impedance of an amplifier with feedback can be used to determine the input impedance of a triode taking into account

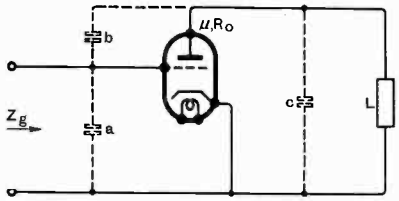

Fig. 8.

the feedback through the grid anode capacitance.

Conventions with Reference to Fig. 8

a = impedance of grid-cathode capacitance.
b = impedance of anode-grid capacitance.
c = impedance of anode-cathode capacitance.
R_0 = A.C. resistance of valve.
L = load impedance.

The input impedance $Z_g = \dfrac{Z_c}{1 + \mu\beta}$

where Z_c is the input impedance cold.

$$Z_c = \frac{a\left[b + \dfrac{1}{\dfrac{1}{R_0} + \dfrac{1}{c} + \dfrac{1}{L}}\right]}{a + b + \dfrac{1}{\dfrac{1}{R_0} + \dfrac{1}{c} + \dfrac{1}{L}}}$$

$$= \frac{a\left[\dfrac{b}{R_0} + \dfrac{b}{c} + \dfrac{b}{L} + 1\right]}{\dfrac{a+b}{R_0} + \dfrac{a+b}{c} + \dfrac{a+b}{L} + 1}$$

$$= \frac{a(bcL + bR_0L + bR_0c + R_0cL)}{(a+b)cL + (a+b)R_0L + (a+b)R_0c + R_0cL}$$

$$= \frac{N_1}{D}, \text{ say}$$

$$\beta = \frac{a}{a+b} \cdot \frac{\dfrac{1}{\dfrac{1}{a+b} + \dfrac{1}{c} + \dfrac{1}{L}}}{R_0 + \dfrac{1}{\dfrac{1}{a+b} + \dfrac{1}{c} + \dfrac{1}{L}}}$$

$$= \frac{\dfrac{a}{a+b}}{\dfrac{R_0}{a+b} + \dfrac{R_0}{c} + \dfrac{R_0}{L} + 1}$$

$$= \frac{acL}{R_0cL + (a+b)LR_0 + (a+b)cR_0 + (a+b)cL}$$

$$= \frac{N_2}{D}, \text{ say}$$

$$\therefore\ 1 + \mu\beta = 1 + \mu\frac{N_2}{D} = \frac{D + \mu N_2}{D}$$

$$\therefore\ Z_g = \frac{Z_c}{1 + \mu\beta} = \frac{N_1}{D} \Big/ \frac{D + \mu N_2}{D} = \frac{N_1}{D + \mu N_2}$$

$$= \frac{a[bcL + bR_0L + bR_0c + R_0cL]}{(a+b)cL + (a+b)R_0L + (a+b)R_0c + R_0cL + \mu acL}$$

$$= \frac{a[R_0L(b+c) + bc(L + R_0)]}{(a+b)(cL + R_0L + R_0c) + cL(R_0 + \mu a)}$$

To simplify this expression for the case where a and c are neglected put

$$a = c = \text{infinity}.$$

www.americanradiohistory.com

Then

$$Z_g = \frac{a[R_0Lc + bc\,(L + R_0)]}{a(cL + R_0c) + cL\mu a}$$

$$= \frac{R_0L + bL + bR_0}{L + R_0 + L\mu}$$

$$= \frac{R_0L + b(R_0 + L)}{R_0 + L(1 + \mu)}$$

If b is constituted by a small capacitance C_b of impedance large compared to R_0, Z_g becomes a capacitive impedance corresponding to a capacitance C_m such that

$$Z_g = \frac{1}{jC_m\omega} = \frac{R_0 + L}{R_0 + L(1 + \mu)} \cdot \frac{1}{jC_b\omega}$$

$$\therefore \quad C_m = \frac{R_0 + L + L\mu}{R_0 + L} C_b$$

$$= \left[1 + \frac{L}{R_0 + L}\mu\right] C_b$$

which justifies the usual approximation for Miller capacitance consisting in multiplying the anode grid capacitance by one plus the effective magnification of the valve.

It is to be noted that if in the simplified expression for Z_0 we put $L = jx$ corresponding to an inductive load

$$Z_g = \frac{R_0 + jx}{R_0 + jx(1 + \mu)} \cdot \frac{1}{jC_b\omega}$$

$$= \frac{x - jR_0}{C_b\omega[R_0 + jx\,(1 + \mu)]}$$

This will have a negative resistance component when

$$\tan^{-1}\frac{R_0}{x} + \tan^{-1}\frac{x(1 + \mu)}{R_0} > 90^\circ$$

in which case singing will result unless the grid is loaded with an appropriate resistance.

It will have become apparent that in investigating amplifying circuits to which feedback is applied it is often necessary to know what are the phase shift characteristics of these circuits, in addition to their amplification characteristics expressed as a function of frequency.

The simplest form of phase shift measuring circuit is shown in Fig. 9.

A is the amplifier being measured, R_L is the load impedance into which it is intended to work. $R_1 = R_2$ and $R_3 = R_4$ are resistances large enough to reduce the loading of the circuit to substantially negligible proportions, B_1 and B_2 are attenuating networks, R_5 is a resistance of convenient value terminating the two attenuating networks. V is a voltmeter. B_1 and B_2 must have at all times a combined attenuation which is large compared to the amplifier gain less the transition loss introduced by the resistances R_1, R_2, R_3 and R_4. S_1 and S_2 are double-pole break switches. Further, the attenuation of B_2 is variable and the individual attenuations of B_1 and B_2 should preferably never be less than 20 db so that the terminal condition on their inputs (facing R_1, R_2, R_3 and R_4) do not appreciably affect their output impedances.

The method of measurement consists in first observing the voltage V_1 across R_5 with S_1 closed and S_2 open. S_1 is then opened and S_2 closed and attenuator B_2 adjusted until the voltage V_2 across R_5 is equal to V_1. S_1 is then closed and V_3, the voltage resultant from the two paths feeding into R_5, is observed.

If ϕ is the phase difference between the two equal voltages V_1 and V_2, it is obvious that their difference $V_3 = 2V_1 \sin\frac{\phi}{2}$, so that

$$\phi = 2\sin^{-1}\frac{V_3}{2V_1}.$$

An improved form of circuit is shown in Fig. 10, in which a bridge circuit B has been

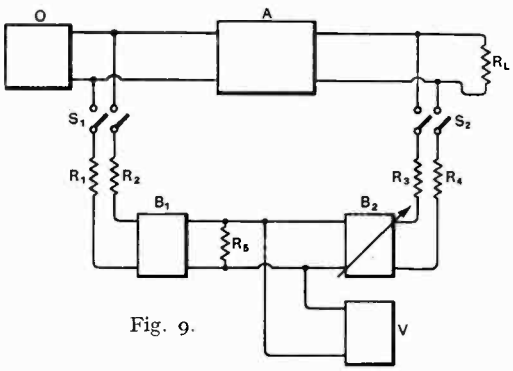

Fig. 9.

introduced to remove all restrictions on the attenuation in B_1 and B_2 other than those imposed by the requirement of equality of V_1 and V_2. Identical wide range repeating coils T_1 and T_2 have been introduced to eliminate any unbalance contributed by the bridge and voltmeter or to enable unbalanced circuits to be used

www.americanradiohistory.com

at input and output of the amplifier under test.

Resistances R_6 and R_7 have been added to limit the impedances facing the transformers to a constant value. Attenuator B_2 must

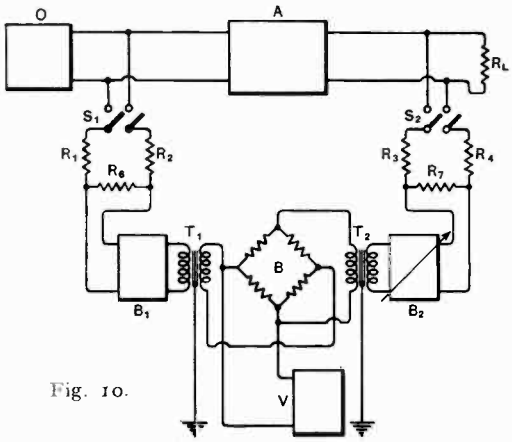

Fig. 10.

now be of the constant impedance type, the circuit constant being adjusted so that T_1 and T_2 always work between the same impedances as one another.

More elaborate methods are described in an excellent paper by Peterson, Kreer and Ware in the *Bell System Technical Journal* for October, 1934; "Regeneration Theory and Experiment."

Correspondence

Amplitude, Frequency and Phase Modulation

To the Editor, The Wireless Engineer.

SIR,—In the Editorial in *The Wireless Engineer* for May, 1940, at the top of column 2 on the first page, G.W.O.H. mentions that the position of an "angular velocity modulated" wave—if you will permit me to coin a phrase—may be given by

$$\sin (\omega_0 + \delta\hat{\omega} \sin pt)t.$$

This relation is quite wrong, as has been pointed out by Luck (*Proc. Inst. Rad. Eng.*, Vol. 20, p. 884, 1932), since, if the phase angle is differentiated to obtain the instantaneous angular velocity, the instantaneous angular velocity seems to keep increasing with time. The correct procedure for finding the equation of an "angular velocity modulated" wave is to integrate the expression for the instantaneous angular velocity. If this is done, the result, for frequency modulation, is

$$\sin (\omega_0 t + \hat{\theta} \sin pt)$$

as Dr. Hughes indicates in his note in *The Electrician*.

Dr. Hughes' statement that, if the extreme frequency modulation $\delta\hat{\omega}$ exceeds p, then the band spread is practically confined to twice the modulation frequency, is clearly a misprint, as should be evident from the context. If, in line 8 in paragraph 8 of page 189 of Dr. Hughes' article, "$2\delta\omega$" is substituted for "$2p$," then the rule becomes reasonably accurate and is widely applied. It cannot, of course, be used, when one is concerned with such problems as the distortion resulting from clipping the extreme side-bands.

There is no discontinuity at the point $\hat{\theta} = 1$ radian, as will be clear, if the Bessel series expansion of a frequency modulated wave into its frequency components, is examined, but rather a gradual transition from the region in which the band is twice the highest modulation frequency into that in which the band is twice the maximum frequency deviation. (*Cf.* Roder, *Proc. Inst. Rad. Eng.* Vol. 19, p. 2145, 1931, especially Fig. 3.)

Dr. Hughes' claim that duplex frequency and amplitude modulation on the same frequency is possible is accurate, except when he states that "this does not appear to have been practised." Several investigators have accomplished this feat without excessive cross-talk between the two channels. Among these are Hayasi (*Journ. I.E.E. of Japan*, Vol. 54, p. 410, 1934), Woodyard (*Proc. Inst. Rad. Eng.*, Vol. 25, p. 612, 1937) Sandstedt (*Proc. Inst. Rad. Eng.*, Vol. 26, p. 927, 1938), and Hayasi and Yamagiwa (*Nippon Elec. Comm. Eng.*, Vol. 13, p. 436, 1938). In addition, the Armstrong wide-band system depends for its advantages upon the effective suppression of any amplitude variations which may be present in the received signal. In effect, therefore, this too is an application of duplex transmission, for the converse problem, that of receiving amplitude modulation to the exclusion of frequency modulation, is relatively simple, if selective fading is absent.

May I add further confusion to the discussion of the distinction between frequency and phase modulation? The wide-band system, as now employed by Armstrong in this country, is neither frequency nor phase modulation, but rather a combination of the two. The signal is frequency modulated for audio frequencies between 30 and 500 cycles, but the higher audio frequencies are pre-emphasised in the transmitter (and attenuated in the receiver so that the overall frequency characteristic will be flat) to improve further the signal to disturbance ratio. Thus, for high audio frequencies the signal is approximately phase modulated. For lack of a better term, this special class of "angular velocity modulation" might be called "constant-band modulation," since an attempt is made to keep the band-width of the signal constant (when account is taken of the non-uniform energy distribution in typical programme material). Perhaps you can suggest a more descriptive term.

Cambridge, Mass., U.S.A. DALE POLLACK.

[Mr. Pollack is quite correct in his statement that the frequency modulated wave cannot be represented by the formula $\sin (\omega_0 + \delta\hat{\omega} \sin pt)t$ since this would make the angle equal to the product of the *momentary* value of the angular velocity and the time. The deviation from the unmodulated angle $\omega_0 t$ must, of course, be obtained by integrating the variable $\delta\hat{\omega} \sin pt$ over the time t, or, what comes to the *same* thing, the above formula should be written $\sin (\omega_0 + \overline{\delta\hat{\omega} \sin pt})t$, where the bar above the second term indicates the mean value during the time t. G.W.O.H.]

www.americanradiohistory.com

Neutralising Screened Grid Valves*

By V. O. Stokes

(Marconi's Wireless Telegraph Co., Ltd., Research and Development Department)

WHEN using screened grid valves, pentodes, kinkless tetrodes or similar valves with particularly good circuits, it is sometimes found that there is a tendency to instability. Even with circuit screening as perfect as possible this instability persists. It is due to the grid-anode capacitance coupling in the valve and can be overcome by applying damping and so nullifying the goodness of the circuits, or by neutralising this capacitance and obtaining the full advantage of the good circuits.

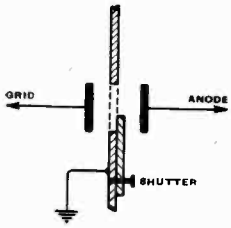

Fig. 1.

Obviously the latter method is the better but this capacitance is extremely small, and the problem resolves itself into making a suitable neutralising condenser.

Consider the case of a push-pull circuit. With triode valves the usual practice is to place grid circuit elecrodes of the condensers in the anode compartment, coupling them to anode electrodes on the opposite side of the circuit. Control is effected by varying the position of the grid or anode electrodes. If this method is adopted with screened grid valves, the required spacing is so great that it is not easy to prevent the grid circuit electrodes coupling to the anode electrodes on the same side of the circuit. Also the capacitances due to the mountings and insulated couplings are sufficient to swamp the neutralising capacity.

In the method of neutralising here described, the small variable capacitance is obtained by placing an earthed screen with a hole in it in between the grid and anode electrodes, so that one electrode looks at the other through the hole. Control is effected by operating a shutter attached to the screen and so varying the size of the aperture. This is shown in Fig. 1.

* MS. accepted by the Editor, April, 1940.

Fig. 2 shows a tuned-grid tuned-anode push-pull amplifier with screened grid valves and using this type of condenser for neutralising. The existing earthed screen between the grid and anode compartments is utilised for the condenser screen.

It will be seen that it is not necessary to introduce a grid circuit electrode into the anode compartment and that control is at earth potential. By suitable arrangement the electrodes can be mounted on existing components such as the tuning condensers, thereby avoiding additional mountings with their attendant capacitances and losses and reducing connections to a minimum.

A modified arrangement of Fig. 2 is given in Fig. 3. In this case the anode electrode of the neutralising condenser has been eliminated, and the grid electrode looks directly at the valve anode through the hole in the screen. As previously stated the required neutralising capacitance is extremely small and it is not necessary for the valve

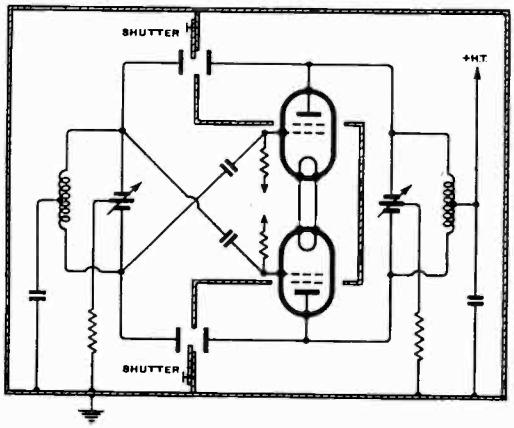

Fig. 2.

to be in close proximity to the screen. This method is particularly suitable where no anode component is near the screen, and so a mounting would be required for the anode electrode shown in Fig. 2.

www.americanradiohistory.com

Fig. 4 shows a single valve stage neutralised in the same way.

In practice it has been found that a suitable capacitance for small valves is obtained by using 1in. diameter disc-electrodes spaced

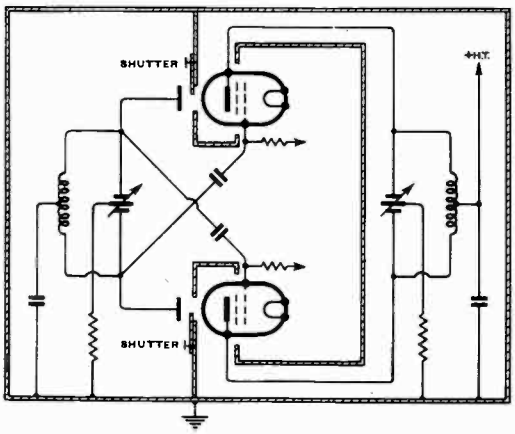

Fig. 3.

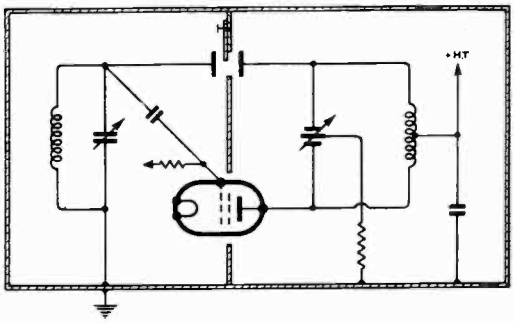

Fig. 4.

about $\frac{3}{16}$in. from the screen, with a $1\frac{5}{8}$in. diameter hole in the screen. When using the arrangement shown in Fig. 3 similar sizes were suitable for hole and grid electrode and the valve anode was about 1in. from the screen. These dimensions will be suitable for most small valves, and the actual capacitance required in each case can be obtained by operating the shutter.

Wireless Patents

A Summary of Recently Accepted Specifications

The following abstracts are prepared, with the permission of the Controller of H.M. Stationery Office, from Specifications obtainable at the Patent Office, 25, Southampton Buildings, London, W.C.2, price 1/- each

DIRECTIONAL WIRELESS

520 081.—Direction-finder in which a visual indication, both of sense and direction, is given on a cathode-ray tube.

Marconi's W. T. Co.; S. B. Smith; and I. S. Forbes. Application date 6th October, 1938.

520 606.—Direction-finding system adapted to operate on the initial portion only of a telegraphic signal, in order to eliminate the so-called "night error."

Standard Telephones and Cables (communicated by Le Matériel Téléphonique Soc. Anon.). Application date 15th November, 1938.

RECEIVING CIRCUITS AND APPARATUS

(See also under Television)

519 786.—Minimising distortion by applying negative feed-back derived from the loud speaker to the high-frequency stage of a wireless receiver.

L. L. de Kramolin. Convention date (Germany) 4th October, 1937.

519 905.—Motor-driven combined push-button and manual tuning system with means for independently exciting the motor so as to approach a given scale marking in a desired direction.

Kolster-Brandes and W. A. Beatty. Application date 7th October, 1938.

519 974.—Reducing the effect of interference in a radio receiver by a method which depends upon stepping-up the signal frequency and using loosely-coupled circuits.

K. H. Meier. Application date 4th July, 1938.

520 036.—Mains-driven wireless set arranged to be operated from one or other of a number of different supply voltages.

A. A. Thornton (communicated by Philco Radio and Television Corp.). Application date 11th October, 1938.

520 041.—Design of multi-grid "mixer" valve for a superhet set intended to secure a particular grid-current characteristic for one of the grids.

Standard Telephones and Cables and W. T. Gibson. 11th October, 1938.

520 042.—Push-button tuning control in which provision is made for receiving programmes from different stations in a predetermined sequence.

Kolster-Brandes and C. N. Smyth. Application date 11th October, 1938.

520 073.—Remote-controlled receiver in which the gain is regulated by negative feed-back through a variable resistance.

C. A. Laws and H. K. Robin. Application date 1st July, 1938.

www.americanradiohistory.com

520 128.—Remote volume control, involving the use of negative reaction, for a wireless receiver.

Murphy Radio; D. N. Truscott; and G. D. Reynolds. Application date 13th September, 1938.

520 141.—Remote control system, for a wireless receiver, based on the use of a number of different "control" oscillators.

Marconi's W. T. Co. (assignees of S. W. Seeley). Convention date (U.S.A.) 9th October, 1937.

520 335.—Design and arrangement of the contact bars for different wave-ranges in a press-button tuning system.

E. K. Cole and E. J. Wyborn. Application date 13th October, 1938.

520 426.—Increasing the signal-to-noise ratio in a wireless receiver by using non-linear impedances with variable and automatic biasing arrangements.

A. A. Thornton (communiacted by Philco Radio and Television Corp.). Application date 26th August, 1938.

520 497.—Remote control of a motor-tuned wireless receiver through the electric supply mains.

Marconi's W. T. Co. (assignees of S. W. Seeley). Convention date (U.S.A.) 23rd October, 1937.

520 552.—Ganged variable-permeability unit for simultaneously tuning the signal and local oscillator circuits in a superhet receiver.

Murphy Radio and J. H. Balean. Application date 25th October, 1938.

520 628.—Dipole and reflector aerial unit, particularly for television, with reflector, "matching" transformer, and screened feed-line.

Belling and Lee and F. R. W. Strafford. Application date 24th September, 1938.

520 622.—Screening arrangement for protecting the I.F. amplifier of a superhet set from disturbances due to harmonics of the mains-supply frequency.

Philips' Lamps. Convention date (Germany) 3rd June, 1938.

520 819.—Superhet receiver with press-button or keyboard tuning, and with means for allowing a more exact adjustment of the radio-frequency circuits.

Philips' Lamps. Convention date (Germany) 30th May, 1938.

TELEVISION CIRCUITS AND APPARATUS

For Transmission and Reception

519 757.—Electron-multiplier arranged as a modulator for television signals and provided with means for limiting the photo-electric output during the synchronising impulses.

Radio-Akt. D. S. Loewe. Convention date (Germany) 5th October, 1937.

519 897.—Saw-toothed oscillation generator for television scanning in which a sequence of unidirectional impulses or "pips" are used to trigger one or more discharge tubes.

Marconi's W. T. Co.; D. J. Fewings; and R. J. Kemp. Application date 6th October, 1938.

520 082.—Television receiver in which automatic gain control is applied by pulses which are derived from the frame synchronising signals.

Kolster Brandes and W. A. Beatty. Application date 7th October, 1938.

520 106.—Electrode and scanning arrangements for a cathode-ray tube with a mosaic-cell screen for generating television signals.

Marconi's W. T. Co. (assignees of H. A. Iams). Convention date (U.S.A.) 26th October, 1937.

520 187.—Cathode-ray television receiver in which means are provided for avoiding the "compression" of low-intensity signals.

Electrical Research Products Inc. Convention date (U.S.A.) 16th October, 1937.

520 235.—Cathode-ray television receiver with means for centering and magnifying any selected part of the image.

Kolster-Brandes and C. N. Smyth. Application date 11th October, 1938.

520 349.—Apparatus for testing the correct operation of interlaced scanning in a television receiver.

Scophony and A. F. H. Thomson. Application date 19th October, 1938.

520 374.—Arrangement of the magnetic deflecting system in a cathode-ray tube, particularly for television.

Philips' Lamp Co. Convention date (Netherlands) 12th July, 1938.

520 412.—Means for mounting and masking a cathode-ray tube in a television receiver cabinet.

Kolster-Brandes and C. N. Smyth. Application date 21st October, 1938.

520 460.—Blocking-oscillator circuit for generating saw-toothed oscillations suitable for use in television scanning.

The General Electric Co.; E. C. Cherry; and R. J. Clayton. Application date 31st October, 1938.

520 489.—Circuit for producing a steady deflection or "shift" of the scanning area in a magnetically-controlled cathode-ray television tube.

Fernseh Akt. Convention date (Germany) 23rd October, 1937.

520 549.—Thermionic amplifier, particularly for television, in which a variable element in a negative feed-back circuit is used for gain or equalisation control.

Standard Telephones and Cables and A. H. Roche. Application date 25th October, 1938.

520 561.—Transmitting system with two-stage phase-opposed modulation, giving a straight-line characteristic, particularly for television signals.

Standard Telephones and Cables (assignees of Le Matériel Téléphonique Soc. Anon.). Convention date (France) 24th December, 1937.

520 646.—Television transmitter tube in which a negative image is formed on a mosaic screen and in which means are provided for neutralising the electric charges and stabilising the electron emission from the screen.

A. D. Blumlein. Application date 27th October, 1938.

520 709.—Circuit for separating synchornising impulses from picture signals in a television receiver.

W. Jones and Pye. Application date 28th October, 1938.

www.americanradiohistory.com

520 775.—Using an auxiliary control frequency to improve the operation of interlaced scanning.

Radio-Akt. D. S. Loewe. Convention date (Germany) 21st June, 1937.

TRANSMITTING CIRCUITS AND APPARATUS

(See also under Television)

520 074.—Preventing mutual interference in a wired radio system for transmitting a number of different programmes simultaneously.

Wired Radio Inc. Convention date (U.S.A.) 28th August, 1937.

520 075.—Supplying the output stage of a wireless transmitter so that, in the absence of modulation, substantially no carrier-wave is absorbed.

R. L. Fortescue (addition to 504 196). Application date 10th August, 1938.

520 254.—Thermionic oscillator in which the frequency is stabilised against fluctuations in the voltage supply, and the production of harmonics is minimised.

Marconi's W.T. Co. (assignees of F. H. Shepard. Convention date (U.S.A.) 16th October, 1937.

520 756.—Means for preventing mutual interference in multiplex telephony systems using double modulation.

Standard Telephones and Cables, Ltd. (communicated by Staat den Nederlanden). Application date 31st October, 1938.

520 790.—Remote-control arrangement for a radio telegraphic and telephonic transmitter.

The General Electric Co. and A. A. Chubb. Application date 1st November, 1938.

520 972.—Short-wave oscillation-generator using a split-anode and grid system, coupled through a number of parallel wires.

Marconi's W.T. Co. and E. W. B. Gill. Application date 5th November, 1938.

CONSTRUCTION OF ELECTRONIC-DISCHARGE DEVICES

519 653.—Electron multiplier with separate or branched target systems fed from a common cathode, under intensity or deflection control, for generating waves of a particular form.

Kolster-Brandes and W. A. Beatty. Application date 21st September, 1938.

519 668.—Construction of the magnetic focusing system for a cathode-ray tube.

A. C. Cossor; L. H. Bedford; L. Jofeh; and W. H. Stevens. Application date 10th May, 1938.

519 715.—Magnetic focusing arrangement for applying "shift" in the X or Y directions to the electron stream of a cathode-ray tube.

A. C. Cossor; L. H. Bedford; L. Jofeh; and W. H. Stevens. Application date 10th May, 1938.

519 747.—Means for controlling the transit-time frequency-characteristic of an electron multiplier used as a phase-shifting device.

Kolster-Brandes and W. A. Beatty. Application date 30th September, 1938.

520 117.—Arrangement and assembly of the "target" electrodes of an electron multiplier not requiring auxiliary focusing means.

Marconi's W.T. Co. (assignees of J. A. Rajchman and E. W. Pike). Convention date (U.S.A.) 30th October, 1937.

520 462.—Preventing undesirable back-coupling in a valve of the kind in which a special grid is used to guide the electron stream through the interstices of an accelerating grid.

The General Electric Co. and R. W. Sloane. Application date 31st October, 1938.

520 723.—Construction and disposition of the magnetic deflecting system for a cathode-ray tube or electron-beam valve.

A. C. Cossor; L. H. Bedford; L. Jofeh; and W. H. Stevens. Application date 10th May, 1938.

SUBSIDIARY APPARATUS AND MATERIALS

519 499.—Suppressor device to prevent the radiation of static interference by vacuum cleaners and other electrically-driven appliances.

The British Thomson-Houston Co. and T. H. Kinman. Application date 5th November, 1938.

519 506.—Low-pass filter device, particularly suitable for protecting a wireless receiver from high-frequency interference, produced say in an A.C.-D.C. "vibrator" converter.

The General Electric Co. and A. Bloch. Application date 7th November, 1938.

519 766.—Terminating flare or horn for a transmission line or "dielectric guide" used for the transmission or reception of very short waves.

Electrical Research Products Inc. Convention date (U.S.A.) 29th April, 1938.

519 830.—Means for increasing the red and infra-red sensitivity of a selenium cell.

The British Thomson-Houston Co. Convention date (Germany) 29th September, 1937.

519 921.—Visual tuning indicator of the cathode-ray type arranged so as to show the wave-range as well as the tuning point of a selected station.

Vereinigte Glohlampen &c. Akt. Convention date (Germany) 28th May, 1938.

520 005.—Method of preparing a rectifier of the copper-cuprous-oxide type so as to improve its working characteristic.

Standard Telephones and Cables (assignees of G. O. Smith). Convention date (U.S.A.) 4th December, 1937.

520 267.—Means for supporting and energising a piezo-electric oscillator for long-distance control.

Standard Telephones and Cables (assignees of W. P. Mason). Convention date (U.S.A.) 10th November, 1937.

520 357.—Method of mounting a piezo-electric crystal in a gramophone pick-up.

Webster Electric Co. Convention date (U.S.A.) 21st January, 1938.

520 411.—Valve circuit utilising a secondary electron stream for rapidly discharging the condenser of a relaxation oscillation-generator. (Addition to 485 120.)

Standard Telephones and Cables and D. H. Black. Application date 21st October, 1938.

www.americanradiohistory.com

Abstracts and References

Compiled by the Radio Research Board and reproduced by arrangement with the Department of Scientific and Industrial Research

For the information of new readers it is pointed out that the length of an abstract is generally no indication of the importance of the work concerned. An important paper in English, in a journal likely to be readily accessible, may be dealt with by a square-bracketed addition to the title, while a paper of similar importance in German or Russian may be given a long abstract. In addition to these factors of difficulty of language and accessibility, the nature of the work has, of course, a great influence on the useful length of its abstract.

	PAGE
Propagation of Waves	358
Atmospherics and Atmospheric Electricity	362
Properties of Circuits	363
Transmission	365
Reception	367
Aerials and Aerial Systems ...	370
Valves and Thermionics	371
Directional Wireless	372
Acoustics and Audio-Frequencies	373
Phototelegraphy and Television ...	375
Measurements and Standards ...	376
Subsidiary Apparatus and Materials	378
Stations, Design and Operation ...	381
General Physical Articles	382
Miscellaneous	383

PROPAGATION OF WAVES

2860. ON THE ATTENUATION OF ELECTROMAGNETIC WAVES IN TUBES [Metal Guides, "Resotanks," etc: Simple & Universal Method of Loss Calculation leading to Same Results as "Complicated Methods" of Chu, Barrow, & others: from Value of Tangential Component of Magnetic Field on Surface of Perfect Conductors of Same Shape & Disposition].—S. M. Rytov. (*Journ. of Phys.* [of USSR], No. 2, Vol. 2, 1940, pp. 187–190: in English.)

2861. DAMPED ELECTROMAGNETIC WAVES IN HOLLOW METAL PIPES [Successful Experiments with Wavelengths down to 4.59 cm (Free-Space) in Air-Filled Pipes as small as 2.86 cm diam: Support for Chu's Theoretical Treatment of Elliptical Pipes: Possibility of Detecting Small Deformations in "Circular" Pipes].—A. W. Melloh. (*Proc. Inst. Rad. Eng.*, April 1940, Vol. 28, No. 4, pp. 179–183.)

2862. THE MOVEMENT OF ELECTROMAGNETIC WAVES IN A CONICAL HORN.—Buchholz. (*See* 3009.)

2863. ENERGY DISTRIBUTION IN THE NEAR ZONE OF TRANSMITTING DIPOLES UNDER WATER, WITH THE USE OF REFLECTORS [Wavelength 107 cm].—Pätzold & Osswald. (*See* 3276.)

2864. A NOTE ON THE DIURNAL VARIATION OF ULTRA-SHORT-WAVE "OPTICAL-PATH" TRANSMISSION [Variations, shown by Continuous Records of 2 m & 4 m Signals, explained by Wave Interference varying with Changes in Composition of Troposphere].—Englund, Crawford, & Mumford. (*Proc. Inst. Rad. Eng.*, March 1940, Vol. 28, No. 3, p. 144: summary only.)

2865. [Ultra-] HIGH-FREQUENCY PROPAGATION CHARACTERISTICS [35.6 Mc/s Survey from 165 ft. Height in Urban Area, radiating over Hilly Country: Measuring Technique & Procedure: Agreement with Beverage Inverse-3.6-Power Law beyond Optical Range: Effect of Slope of Ground at 1 Mile: etc.].—F. Hamburger, Jr., C. V. Larrick, & M. Jones. (*Proc. Inst. Rad. Eng.*, April 1940, Vol. 28, No. 4, pp. 175–179.) *Cf.* 2132 of June.

2866. ECHO INVESTIGATION ON ULTRA-SHORT WAVES [primarily to test the Existence of the "Somewhat Hypothetical" Absorbing Layer, below the E Layer, during Violent Magnetic Storms: but with Conclusions regarding Other Workers' Echoes from 9–22 km Heights: also Observations of 11.5 Mc/s Echoes from 17 km Distances].—L. Harang & W. Stoffregen. (*Hochf:tech. u. Elek:akus.*, April 1940, Vol. 55, No. 4, pp. 105–108.)

If the hypothetical "absorbing layer" at 70–100 km is a continuous layer, tests on a 7.3 m wave, given suitable apparatus, might be expected to yield regular echoes, since this wave would be less absorbed than the waves ordinarily used in E and F investigations; if, as seems more probable, the layer is an inhomogeneous one composed of rapidly forming and dissolving ion clouds, evidence of scattered reflections might be expected. The Tromsö investigations here described, with 4 kw in the aerial, showed however no signs of echoes from such a layer, even during an extremely violent magnetic storm when the simultaneous observations on 3–15 Mc/s gave that complete absence of echoes which is taken to indicate the presence of the "absorbing layer."

On the other hand, during the severest part of the storm (when a very brilliant aurora was present) irregular, fluctuating echoes of small amplitude

www.americanradiohistory.com

were recorded on the 7.3 m wave from scattered reflections at heights of 400–800 km, showing that these waves must have penetrated the low "absorbing layer"; this result allows the upper limit of the electron density in such a layer to be estimated. The echoes are interpreted as due to scattering reflection from ion clouds of dimensions of the same order of magnitude as the wavelength, no doubt produced by the penetration of the corpuscles causing the aurora.

The apparatus was then most carefully adjusted so that echoes from distances down to 8 km could be recorded on the 7.3 m wave. "The observations showed a series of reflections from a height range of 8 to 20 km. Careful tests showed that these echoes were real and not due to any apparatus effects. The echoes observed showed no fading phenomena. A closer investigation, however, led to the conclusion that in all likelihood these echoes must be regarded not as vertical reflections but as reflections from the side (lateral echoes). Thus tests with increasing distances—150, 900, & 2000 m—between transmitter and receiver showed that the echoes did not appreciably change in amplitude, although the ground-wave signals decreased till they were nearly of the same order of amplitude as the echoes. On the other hand, a change in the orientation of the transmitting dipole produced a marked alteration in the character of the resulting echoes": *see* Fig. 4, where for instance a horizontal dipole in the E-W direction gave two echoes, corresponding to reflection distances of 8 and 14.8 km, whereas when oriented in the N-S direction it gave only a single echo, corresponding to 15.6 km. Set vertically, the dipole gave a series of small-amplitude echoes distributed over the range of reflection distances from 8 to 15 km. These results fit in with the writer's hypothesis that the echoes are due to reflections from the various mountains surrounding Tromsö in all directions at distances from 5 to 20 km; a control experiment with a long base line of 17 km, where the direction of propagation lay along a fiord, so that the probability of such reflections was much smaller, seems to confirm this, for although the ground wave was sufficiently strong no echoes were obtained. "In our opinion it is desirable that this possible explanation by horizontal reflections should be investigated also in the case of the earlier observations, by other workers, of echoes of extremely short delay."

A final paragraph deals with echo tests on 11.5 Mc/s pulses of about 50 kw power, in which, in spite of interference from numerous stations (owing to the wide band-width of the special receiver), weak echoes of constant amplitude were occasionally obtained with a reflection distance of about 17 km. "How far these echoes may be explained in the same way as the above-discussed u.s.w. echoes must be decided by further tests."

2867. RADIO WAVE REFLECTIONS IN THE TROPOSPHERE [from Temperature Inversions: Signal-Strength Measurements on Ultra-Short Waves (at about 100 km) employed for Calculation of Reflection Coefficients for Longer Waves at Vertical Incidence: Comparison with Estimates by Other Workers: Comparative Values for Diffuse & Sharp Boundaries].—L. G. Stoodley. (*Nature*, 11th May 1940, Vol. 145, p. 743.) Using a simple relation between oblique and normal incidence.

2868. REFLECTION AND ABSORPTION OF RADIO WAVES IN THE IONOSPHERE, *and* ABSORPTION AND REFLECTION OF RADIO WAVES AT OBLIQUE INCIDENCE, AND THEIR RELATIONSHIP WITH VERTICAL-INCIDENCE PHENOMENA.—K. B. Mathur. (*Sci. Abstracts*, Sec. A, 25th May 1940, Vol. 43, No. 509, p. 431: pp. 431–432.)

2869. ABSORPTION OF RADIO WAVES IN THE EARTH'S ATMOSPHERE [Magneto-Ionic Theory, with Distinction between "Quasi-Transverse" & "Quasi-Longitudinal" Propagation of Ordinary & Extra-ordinary Components: Absorption in Non-Reflecting & Reflecting Regions, for Different Latitudes: etc.].—R. R. Bajpai & K. B. Mathur. (*Sci. Abstracts*, Sec. A, 25th May 1940, Vol. 43, No. 509, p. 431.) A summary was dealt with in 3040 of 1939.

2870. COMPENSATION BY VERTICAL MOVEMENT OR BY ADVECTION? [Criticism of Rehorn's Conclusions regarding Temperature & Pressure in Troposphere].—H. Ertel. (*Physik. Berichte*, No. 4, Vol. 21, 1940, p. 457.) But *see* Raethjen, *ibid.*, No. 7, p. 741.

2871. PRESSURE AND TEMPERATURE VARIATIONS IN THE FREE ATMOSPHERE OVER BOSTON, *and* DISTRIBUTION OF TEMPERATURE IN THE LOWER STRATOSPHERE [Analysis of Sounding-Balloon Ascents over 24 km in Different Parts of World, with Some Conclusions].—B. & E. Haurwitz: M. W. Chiplonkar. (*Sci. Abstracts*, Sec. A, 25th May 1940, Vol. 43, No. 509, p. 380: pp. 380–381.)

2872. INTENSITY AND RATE OF PRODUCTION OF MESOTRONS IN THE STRATOSPHERE [from Free-Balloon Observations at Heights up to 20 km].—Schein & others. (*Phys. Review*, 15th May 1940, Ser. 2, Vol. 57, No. 10, pp. 847–854.)

2873. ON THE MAXIMUM ENERGY WHICH THE PRIMARY ELECTRONS OF COSMIC RAYS CAN HAVE ON THE EARTH'S SURFACE DUE TO RADIATION IN THE EARTH'S MAGNETIC FIELD.—Pomeranchuk. (*Journ. of Phys.* [of USSR], No. 1, Vol. 2, 1940, pp. 65–69: in English.)

2874. MAGNETIC STORM EFFECT ON COSMIC RAYS AT HIGH LATITUDES [Difficult to explain by Change in Earth's Magnetic Field].—Loughridge & Gast. (*Phys. Review*, 15th May 1940, Ser. 2, Vol. 57, No. 10, p. 938.)

2875. "COSMIC RAYS" [Book Review].—R. A. Millikan. (*Review Scient. Instr.*, April 1940, Vol. 11, No. 4, p. 145.)

www.americanradiohistory.com

2876. DIELECTRIC CONSTANT OF IONISED AIR [Experiments in Discharge Tube under Controlled Conditions of Tube Current and Pressure: Results consistent with Theory of Ionic Sheath on Inner Surface of Discharge Tube]: III.—S. M. F. Rahman & S. R. Khastgir. (*Phil. Mag.*, April 1940, Ser. 7, Vol. 29, No. 195, pp. 344–352.) Continuation of work dealt with in 3124 of 1938: *see* also 2444 of 1937.

2877. THE DIELECTRIC CONSTANT AND ELECTRICAL CONDUCTIVITY OF GASES AND VAPOURS IONISED BY X-RAYS, AT ULTRA-HIGH RADIO FREQUENCY [Wavelengths 460–480 cm: Variation of X-Ray Intensity and of Gas Pressure].—S. R. Khastgir & S. M. F. Rahman. (*Phil. Mag.*, April 1940, Ser. 7, Vol. 29, No. 195, pp. 353–366.)

The results "indicated that there must be a diminution in the effective dielectric constant of the gaseous medium on ionisation. This change in the dielectric constant is possible if it is assumed that the ejected photoelectrons remain in a free state at least for a small part of the time of exposure to X-rays. . . . The conductivity . . . was found to diminish with the increase of pressure, as was expected from theory. . . . The effect of the X-rays was found to persist for a long time."

2878. A NOTE ON THE DISTRIBUTION OF VELOCITIES OF SLOW ELECTRONS IN GASES.—J. W. Reed. (*A.W.A. Tech. Review*, No. 1, Vol. 5, 1940, pp. 21–27.)

Author's summary:—"Accurate formulae relating to the motions of electrons through a gas in a uniform electric field are given and are compared with those used by Townsend [2453 of 1937 and back ref.] and Bailey [*see* Huxley, 1287 of 1937]. The close agreement between the experimental results obtained by Townsend's method and Bailey's method is used to deduce a condition which the distribution must satisfy; an expression for a velocity-distribution satisfying this condition is then given and is briefly compared with a number of results obtained previously."

2879. THE PROPAGATION OF ELECTROMAGNETIC WAVES IN AN ATMOSPHERE CONTAINING FREE ELECTRONS.—L. G. H. Huxley. (*Phil. Mag.*, April 1940, Ser. 7, Vol. 29, No. 195, pp. 313–329.)

For previous work *see* 1285 of 1938 and back reference. An improved mathematical presentation is here given, with fuller treatment of certain aspects of the subject, including the effect of distribution of the velocities of agitation. The author concludes that "in the majority of cases encountered in practice . . . use of the Appleton-Hartree formulae is not likely to result in serious inaccuracies."

2880. A METHOD OF PLOTTING ELECTRON DISTRIBUTION CURVES FOR THE F LAYER [by a Method of Analysis of a (P′, f) Record].—C. W. McLeish. (*Canadian Journ. of Res.*, May 1940, Vol. 18, No. 5, Sec. A, pp. 98–103.)

"Previous methods of finding electron distribution entailed the measuring of reflection coefficients and equivalent heights for various angles of incidence. One obvious disadvantage is that it is practically impossible to obtain instantaneous observations from various angles of incidence. Recent improvements in the accuracy of equivalent-height measurements [Appleton & Weekes, 3037 of 1939] will make possible the plotting of a dependable distribution curve from a single (P′, f) record."

2881. ANALYSIS OF THE EFFECT OF SCATTERING IN RADIO TRANSMISSION [Three Observed Types all originate in Region of Marked Ionic Irregularity in & above E Layer: Connection with "M-Type" & Abnormal E Reflections: Limitations of Musa Systems: Question of Scattering from Ground: Scattering and Solar Eruptions: etc.].—T. L. Eckersley. (*Journ. I.E.E.*, June 1940, Vol. 86, No. 522, pp. 548–563: Discussion pp. 563–567.) A note and a summary were dealt with in 1304 of April and 1750 of May.

2882. THE WAVE-FORM OF ATMOSPHERICS AT NIGHT.—Elder, Schonland, & others. (*See* 2912.)

2883. ON THE RESULTANT INTENSITY OF A NUMBER OF VIBRATIONS WHOSE PHASES ARE AT RANDOM [with Application to Study of Fading].—M. Nakagami & M. Ohno. (*Nippon Elec. Comm. Eng.*, Jan. 1940, No. 19, pp. 129–137.)

A preliminary contribution was referred to in 879 of February. "There is no reference yet published which explains the resultant intensity when the intensities of the component vibrations are unequal." The writers therefore deal with this case, for two, three, and n components. Above three, "the calculation becomes fairly complicated. However, when the intensities of each component are nearly equal and the number of components is large, the resultant intensity is approximately equal to $\sqrt{\pi/2}$ of the effective value (square root of sum of squares of intensities of each component)."

2884. COSMO-PHYSICAL DISTURBANCES OF THE IONOSPHERE, TROPOSPHERE, AND BIOSPHERE.—Düll & Düll. (*See* 3277.)

2885. INFRA-RED RECORDS OF THE ECLIPSE MADE IN TEXAS [and Berkner's Report on E & F Layer Ionisation].—Berkner. (*Science*, 19th April 1940, Vol. 91, Supp. p. 12.)

E-layer ionisation dropped sharply at beginning of eclipse, held steady until end, then rose to higher than normal: F-layer ionisation held steady until 15–20 minutes after beginning, then dropped about 20%, and rose again as shadow passed.

2886. RADIO AND SUN-CAUSED DISTURBANCES [and the Various Time Lags between Magnetic Storms, Aurora, Sunspots, & Radio Disturbances].—Stetson. (*Science*, 26th April 1940, Vol. 91, Supp. p. 11.) *See* also 2162 of June.

www.americanradiohistory.com

2887. EARTH MAGNETIC CHANGES AND DELLINGER'S EFFECTS OF RADIO WAVES [Analysis of Japanese 1935/1936 Statistics: Theoretical Treatment—Restricted Disturbed Regions in Ionosphere Too Small to be attributed to Sunspots, more probably due to Chromospheric Eruptions: Lag depends on Ionospheric Conductivity: Tides: etc.].—M. Hirayama. (*Sci. Abstracts*, Sec. A, 25th May 1940, Vol. 43, No. 509, pp. 430–431.)

2888. THE ORIGIN OF RADIO FADE-OUTS, AND THE ABSORPTION COEFFICIENT OF GASES FOR LIGHT OF WAVELENGTH 1215.7 AU [New Absorption-Coefficient Measurements show that Ly α will penetrate to 67 km (where Fade-Out Ionisation has been observed): No Known Process by which it can cause Appreciable Ionisation: Higher Ly Members, or X-Rays around 2 AU, as more Probable Agents? etc.].—W. M. Preston. (*Phys. Review*, 15th May 1940, Ser. 2, Vol. 57, No. 10, pp. 887–894.) *See* also 2519 of July.

2889. SOLAR ACTIVITY IN THE [Sunspot-Maximum] YEAR 1938, REGARDED GEOPHYSICALLY, *and* CONTINUOUS VERTICAL-INCIDENCE IONOSPHERE SOUNDINGS ON 81.7 m IN 1938.—Scultetus: Dieminger & Plendl. (*Physik. Berichte*, No. 7, Vol. 21, 1940, p. 729: p. 729.) To be completed by similar daily magnetic records. For a preliminary paper *see* 1353 of 1939.

2890. SOLAR AND TERRESTRIAL RELATIONSHIPS OF MARCH 23–29, 1940 [Comparison of Magnetic Storm Data with Solar Chromospheric Disturbances and Wireless Fade-Outs: Time Lag of 1.5 Days between Chromospheric Eruptions and Magnetic Storms].—M. A. Ellison. (*Nature*, 8th June 1940, Vol. 145, p. 898.) For the magnetic storms *see* 2516 of July, and below.

2891. THE SEVERE MAGNETIC STORM OF MARCH 24TH, 1940 [Alibag Records: Sunspot Observations in U.S.A. and at Kodaikanal: Effects on Wireless Communication].—M. R. Rangaswami & N. C. Basu. (*Current Science*, Bangalore, April 1940, Vol. 9, No. 4, pp. 167–169.) *See* also 2172 of June, and 2890 & 2892.

2892. THE GREAT MAGNETIC STORM [of Easter Sunday, 24th March: with Records].—J. A. Fleming. (*Scient. Monthly*, May 1940, pp. 475–480.) *See* also 2891, above.

2893. FLUCTUATIONS IN AMOUNTS OF LIGHT AND HEAT GIVEN OFF BY SUN CORRESPOND CLOSELY WITH AREAS OF SUNSPOTS.—H. Arctowski: Abbot. (*Sci. News Letter*, 4th May 1940, Vol. 37, No. 18, p. 276.) There was a constant tendency for both maxima and minima in the solar-constant curve to run a little ahead of those for the sunspot areas. *See* also *Science*, 17th May 1940, p. 479.

2894. TEN YEARS' LARGE-SCALE WEATHER INVESTIGATION [for 10-Day Hamburg Forecasts: Part played by Solar Radiation & Geophysical Phenomena: etc.].—H. Philipps. (*Sci. Abstracts*, Sec. A, 25th May 1940, Vol. 43, No. 509, p. 381.)

2895. RELATION OF SUNSPOT PERIODICITY TO PRECIPITATION, TEMPERATURE, AND CROP YIELDS IN ALBERTA AND SASKATCHEWAN.—L. P. V. Johnson. (*Sci. Abstracts*, Sec. A, 25th May 1940, Vol. 43, No. 509, p. 383.)

2896. THE CORONAVISER, AN INSTRUMENT FOR OBSERVING THE SOLAR CORONA IN FULL SUNLIGHT.—A. M. Skellett. (*Bell S. Tech. Journ.*, April 1940, Vol. 19, No. 2, pp. 249–261.) For previous treatment of this device *see* 1756 of May.

2897. FINE STRUCTURE OF SUN'S SURFACE [Zürich Solar-Granulation Observations], *and* SOLAR ERUPTIONS [Relative Distributions of Intensities & Areas: Percentage ejecting Prominences: Position in Chromosphere: etc.].—M. Waldmeier: R. G. Giovanelli. (*Sci. Abstracts*, Sec. A, 25th May 1940, Vol. 43, No. 509, p. 376: pp. 376–377.) For previous work by Giovanelli *see* 924 of March.

2898. THE DETERMINATION OF AURORAL INTENSITY BY A PHOTOMETRIC METHOD [Method: Slow Decay of Sky Brightness after Disappearance of Auroral Forms: Suitability of Method for Exact Comparison with Magnetic Changes].—L. B. & V. C. Snoddy. (*Phys. Review*, 15th May 1940, Ser. 2, Vol. 57, No. 10, p. 943.)

2899. THE AURORA OF 24TH/25TH FEB. 1939 IN GERMANY, AND THE GEOMAGNETIC DISTURBANCES IN NIEMEGK.—J. Bartels. (*Physik. Berichte*, No. 4, Vol. 21, 1940, p. 452.)

The writer considers that the ionospheric disturbances were due to aurora near the zenith, too faintly luminous to be observed, and discusses this interpretation with reference to the work of Dieminger & Plendl (2668 of 1938 and 1353 of 1939) and of Götz (2658 of 1939). *Cf.* also Beckmann & others, 1313 of April.

2900. A NEW AFTERGLOW PHENOMENON [Early and Late Phases of Nitrogen Afterglow: Ratio of Forbidden to Allowed Radiation increases with Pressure: Effect on Spectrum of Afterglow as Its Lifetime increases is That of Apparent Increase in Pressure].—J. Kaplan. (*Phys. Review*, 1st April 1940, Ser. 2, Vol. 57, No. 7, p. 662.)

2901. LUMINOUS DISCHARGE IN A GAS IN THE PRESENCE OF SODIUM CHLORIDE: REMARKS ON THE ORIGIN OF ATMOSPHERIC SODIUM [D-Ray Excitation, & Formation of Metallic Sodium, occur when the Chloride is in presence of Dry Gas traversed by Electric Discharge: No Confirmation of Influence of Humidity: etc.].—G. Déjardin & R. Falgon. (*Rev. Gén. de l'Élec.*, 30th March/6th April 1940, Vol. 47, No. 13/14, pp. 262–263.)

www.americanradiohistory.com

2902. LONG-DISTANCE BROADCASTING [Royal Institution Paper, abridged].—N. Ashbridge. (*Engineer*, 3rd & 10th May 1940, Vol. 169, pp. 415–416 & 444.)

2903. RADIO PROGRESS DURING 1939: PART III—WAVE PROPAGATION [with 96 References to Journals of Many Nationalities].—(*Proc. Inst. Rad. Eng.*, March 1940, Vol. 28, No. 3, pp. 108–112.)

2904. I.R.E.-U.R.S.I. JOINT MEETING, APRIL 1940: SUMMARIES OF PAPERS ON IONOSPHERIC RESEARCH.—Stetson, Bartels, Dellinger, & others. (*Proc. Inst. Rad. Eng.*, March 1940, Vol. 28, No. 3, pp. 141–143.)

2905. THE NEW IONOSPHERIC APPARATUS OF THE NATIONAL INSTITUTE OF GEOPHYSICS IN ROME [covering Whole Range from 3 to 14 Mc/s without Switching, by Use of Variometers in conjunction with Rotating Condensers].—I. Ranzi. (*La Ricerca Scient.*, March 1940, Year 11, No. 3, pp. 133–138.)

2906. SOME MEASUREMENTS OF 540-KILOCYCLE PROPAGATION OVER THE HIGH-CONDUCTIVITY PRAIRIE PROVINCES [Conductivities approaching 1000×10^{-15} e.m.u: Electrically Uniform Earth over 400 Miles in Certain Directions: the Question of Correction for Spherical Earth].—K. A. MacKinnon. (*Proc. Inst. Rad. Eng.*, March 1940, Vol. 28, No. 3, p. 143: summary only.)

2907. "THE MATHEMATICAL THEORY OF HUYGENS' PRINCIPLE" [Book Review].—Baker & Copson. (*Review Scient. Instr.*, April 1940, Vol. 11, No. 4, pp. 145–146.)

2908. FRESNEL FORMULAE APPLIED TO THE PHENOMENA OF NON-REFLECTING FILMS.—K. B. Blodgett. (*Phys. Review*, 15th May 1940, Ser. 2, Vol. 57, No. 10, pp. 921–924.)

2909. ON INTERREFLECTIONS [of Radiant Energy, within Enclosure with Perfectly Diffusing Walls: Precise Treatment using Hilbert-Schmidt Theory of Integral Equations].—Moon. (*Journ. Opt. Soc. Am.*, May 1940, Vol. 30, No. 5, pp. 195–205.)

2910. A NEW APPARATUS FOR THE REPRESENTATION AND INVESTIGATION OF PROGRESSIVE WAVES ALONG A FLEXIBLE CARRIER.—F. Bruns. (*Funktech. Monatshefte*, March 1940, No. 3, pp. 44–47.)

Description of experiments with steel ribbons continuously excited by an air-blast, standing waves being avoided by a tuned "receiver" at the far end which absorbs all the arriving energy. An electro-magnetic method is also described. Stroboscopic methods (including multiple stroboscopy with lights of different colours) are used for observation. Circular and elliptical polarisation effects can be examined. The frequency is of the order of 29–30 c/s.

2911. DIFFRACTION OF A PERTURBATION NEAR A CAUSTIC: APPLICATION TO P′ WAVES [leading to Doubts as to Existence of a Focal Point in Seismic Disturbances].—J. Coulomb. (*Sci. Abstracts*, Sec. A, 25th May 1940, Vol. 43, No. 509, p. 384.)

ATMOSPHERICS AND ATMOSPHERIC ELECTRICITY

2912. THE WAVE-FORM OF ATMOSPHERICS AT NIGHT [Ground Pulse followed by Series of Sky Pulses produced by Successive (often 30) Ionosphere/Earth Reflections: Layer Height (determinable within ± 1 km) 85.5–90.5 km during two Winter Months: Layer Reflection Coefficient exceeds 0.80 for Longer-Period Pulses: etc.].—Elder, Schonland, & others. (*Proc. Roy. Soc.*, Sec. A, 12th June 1940, Vol. 175, No. 962, p. S29: summary only.) *See* also 3063 of 1939.

2913. DIRECTIONAL CHARACTERISTICS OF TROPICAL STORM STATIC [during Hurricane Seasons of 1938 & 1939: Certain Portions (*not* the Eye) of Storm as Principal Sources].—S. P. Sashoff & W. K. Roberts. (*Proc. Inst. Rad. Eng.*, March 1940, Vol. 28, No. 3, p. 143: summary only.) For previous work *see* 504 of February.

2914. LIGHTNING AND HAIL (ON THE ELECTRICAL NATURE OF THE THUNDERSTORM).—F. Rossmann. (*Physik. Berichte*, No. 7, Vol. 21, 1940, p. 730.)

Preliminary outline of theory that the formation of the high field strengths leading to lightning discharges is "causally linked to the occurrence of precipitation elements in solid form. For the production of the high field strengths in ice clouds compared with the low ones in water clouds the difference of the dielectric constants of water (81) and of ice (about 3) is made responsible. The falling rain, by a kind of cohering action, will facilitate the formation of the lightning path."

2915. ORIGIN AND DISTRIBUTION OF THUNDERSTORM ELECTRICITY [Level of Max. Velocity of Ascent is well above Half-Way between Base & Summit—removes Chief Objection to Simpson's Theory].—W. J. Humphreys. (*Sci. Abstracts*, Sec. A, 25th April 1940, Vol. 43, No. 508, p. 284.)

2916. ON THE PART PLAYED BY LIGHTNING IN THE ELECTRICAL MECHANISM OF THE THUNDERSTORM: AN INVESTIGATION BASED ON MEASUREMENTS OF THE FIELD FLUCTUATIONS ASSOCIATED WITH LIGHTNING [Flash as a Secondary Phenomenon in Whole Discharge Process: Attempted Reconciliation of Wilson's Theory with Recent Results that practically All Strokes bring Positive Electricity to Ground].—H. Wichmann. (*Physik. Berichte*, No. 7, Vol. 21, 1940, pp. 729–730.)

2917. LIGHTNING RECORDING INSTRUMENTS: PART I.—J. H. Hagenguth. (*Gen. Elec. Review*, May 1940, Vol. 43, No. 5, pp. 195–201.) Particularly the equipment used in the Empire State Building investigation (2269 of 1939). Part II is in the June issue.

2918. LIGHTNING INVESTIGATION ON TRANSMISSION LINES: VII [1937/38 Results].—W. W. Lewis & C. M. Foust. (*Elec. Engineering*, April 1940, Vol. 59, No. 4, Transactions pp. 227–233.)

www.americanradiohistory.com

2919. LIGHTNING AND BUILDINGS: STATISTICAL STUDY OF LIGHTNING STROKES IN SWITZERLAND, 1925 TO 1937 [and Deductions as to Protection given by Conductors: Requirements of Earths: etc.].—Ch. Morel. (*Bull. Assoc. suisse des Élec.*, No. 8. Vol. 31, 1940, pp. 178–186.)

2920. THE RÔLE OF IONISATION BY POSITIVE IONS IN SPARK BREAKDOWN.—Varney, Loeb, & Haseltine. (*Phil. Mag.*, April 1940, Ser. 7, Vol. 29, No. 195, pp. 379–390.) "Conclusion that . . . ionisation by positive ions in a gas under ordinary sparking conditions . . . is virtually ruled out."

2921. A MATERIAL HAVING A NEGATIVE RESISTANCE/CURRENT CHARACTERISTIC ["Metrosil," and Its Use in Lightning Arresters, etc.].—Metropolitan-Vickers. (*See* 3184.)

2922. ELECTRIC POTENTIAL GRADIENT OF THE LOWER ATMOSPHERE [Results of Observations at Mount Stromlo, 1933–38].—(*Nature*, 8th June 1940, Vol. 145, p. 903: summary of Memoir No. 8, Commonwealth Solar Observatory, Canberra.)

2923. INFLUENCE OF THE LOCALISED ELECTRIC CHARGE ON THE MEASUREMENT OF THE ELECTRIC FIELD OF THE ATMOSPHERE.—E. Medi. (*La Ricerca Scient.*, March 1940, Year 11, No. 3, pp. 128–132.)

PROPERTIES OF CIRCUITS

2924. NATURAL OSCILLATIONS OF ELECTRICAL CAVITY RESONATORS.—Barrow & Mieher. (*See* 2951.)

2925. NOTE ON MODULATION [with Reference also to Super-Regeneration, Circuits with Varying Parameter, etc.].—Brainerd. (*See* 2959.)

2926. THE SYNCHRONISATION OF A SIMPLE RELAXATION OSCILLATOR.—G. Builder & N. F. Roberts. (*A.W.A. Tech. Review*, No. 4, Vol. 4, 1939, pp. 165–180.)

An obvious assumption is that synchronisation would necessarily occur if the natural relaxation frequency of the oscillator were equal to the required synchronised frequency; "in actual fact this assumption is incorrect for a wide range of conditions. We have therefore found it desirable to examine in some detail the conditions for synchronisation; the results, which are of some interest, are presented in this paper. We have restricted the detailed investigation to a simple relaxation oscillator using a gas-filled triode valve, but the general conclusions and the simple graphical methods used appear to be applicable in general to any other simple type of relaxation oscillator." The results were confirmed experimentally.

2927. THE INSTABILITY OF LINEAR AND NON-LINEAR OSCILLATIONS ("MITNAHME"—PULL-IN—OSCILLATIONS).—W. Wenke. (*Hochf:tech. u. Elek:akus.*, April 1940, Vol. 55, No. 4, pp. 109–120.) Concluded from 2626 of July.

2928. REACTANCES WITH NEGATIVE INDUCTIVE OR CAPACITIVE CHARACTERISTICS (NEGATIVE INDUCTANCES AND CAPACITANCES) [as in Automatic Tuning Correction Circuits, etc.].—F. Vilbig. (*Hochf:tech. u. Elek:akus.*, April 1940, Vol. 55, No. 4, pp. 120–132.)

Author's summary:—"The paper describes circuits with wattless retroaction [*cf.* Tüxen, 3132 of 1939 and back references] which present a negative inductive or capacitive reactance characteristic. It is found that, fundamentally, those arrangements in which the grid circuit is traversed only by a voltage-divider current [section IA] show a maximum in their reactance-characteristic curve, and that a negative inductance course can only be obtained below, and a negative capacitance course only above, a certain resonance frequency determined by the values of the circuit elements.

"On the other hand, arrangements in which the grid-circuit resistance is traversed by the *whole* current [section IB] allow a negative inductance or a negative capacitance effect to be obtained over the whole frequency range. The influence of the various circuit elements is discussed, and also that of a reversal of polarity of the grid alternating voltage; and the employment of an auxiliary retroaction [sections IA1d (pp. 124–125) & IB3 (pp. 129–130)], in order to reduce the dissipative-impedance component and to improve the angle ϕ = arc tan reactive-component/dissipative-component, is described [but the same results can be attained more simply].

"Finally [section II] some examples of the application of circuit elements with negative inductive or capacitive reactance characteristics in two-pole or four-pole networks are dealt with" [thus obtaining resistance curves of the most varied types: care, however, must be taken not to displace the phase of the wattless retroaction in paralleling such reactances, or the whole system will become unstable]. For Thon's work, referred to in the literature references, *see* 44 of January: for Feldtkeller's, 4278 of 1938.

2929. THE EMPLOYMENT OF A [Variable-Mu] AMPLIFYING VALVE AS AN ELEMENT OF VARIABLE IMPEDANCE [for Automatic Tuning Correction, for Coupling Adjustment, for Phase Modulation, etc.].—H. Chireix. (*Rev. Gén. de l'Élec.*, 27th April/4th May 1940, Vol. 47, No. 17/18, pp. 317–321.)

Analysis of three circuits, in the first of which the variable admittance is formed between grid and filament, while in the other two it is between the filament and a terminal separated by a capacitance from the anode. In each case formulae are obtained for the calculation of optimum conditions: the treatment is valid provided that the h.f. voltages are not large enough to affect too great a stretch of the valve characteristics.

The section dealing with the first circuit (Fig. 1, equivalent circuit, Fig. 1 *bis*) shows that maximum sensitivity is obtained when $YC\omega - 1 = Y\rho_0$; the sensitivity to variations of the internal resistance is then a maximum for the reactive component of the admittance and zero for the active component. A specially interesting condition is when $YC\omega - 1 = 1/(1 + \mu)$, so that $\rho_0 = Y(1 + \mu)$ and the sensitivity is independent of the

www.americanradiohistory.com

tuning. If on the other hand (departing for a moment from the object in view) the symmetrical condition is taken instead, where $YC\omega - 1 = -1/(1+\mu)$, or $YC\omega = \mu/(1+\mu)$, the active component is again zero and the reactive component is equal to $(1+\mu)C\omega$, a value independent of ρ: "one can, therefore, obtain effective capacitances of considerable magnitude and without losses for a well-determined frequency, by forming Y out of a self inductance, L, satisfying the equation $\omega^2 LC = \mu/(1+\mu)$. This point may be interesting for certain applications."

The second circuit (Figs. 2 & 2 *bis*) is similarly treated. Here the amplification coefficient μ does not come in, and the various admittances are, other things being equal, much smaller than in the first circuit. The third circuit is characterised by the introduction of an impedance X between grid and plate and another Y between grid and filament, these two impedances being such that XY is an imaginary quantity: if one is a resistance and the other a capacitance or self inductance, four combinations are obtainable, giving admittances of different types and values. For other treatments of the subject *see* Feldtkeller, 4278 of 1938; Tüxen, 3132 of 1939; and Thon, 44 of January: for Sheaffer's paper on frequency modulation by a reactance valve *see* 1814 of May.

2930. A NOTE ON THE DETERMINATION OF THE EQUIVALENT ELECTRICAL CONSTANTS OF A QUARTZ-CRYSTAL RESONATOR.—Builder. (*See* 3125.)

2931. ELECTRO-ACOUSTIC REACTIONS, WITH SPECIAL REFERENCE TO QUARTZ-CRYSTAL VIBRATORS [Errors in Usual Assumptions regarding Electrical Equivalents of Mechanical Systems: Exact Equivalent Networks for Fully & Partially Plated Quartz Vibrators: Advantages of Partial Plating: etc.].—A. T. Starr. (*Wireless Engineer*, June & July 1940, Vol. 17, Nos. 201 & 202, pp. 247–256 & 303–309.)

2932. ELECTRIC WAVE FILTERS EMPLOYING CRYSTALS WITH NORMAL AND DIVIDED ELECTRODES [including Theory of Use of Divided-Plate Crystals to halve the Number required in Balanced & Unbalanced Lattice Filters].—W. P. Mason & R. A. Sykes. (*Bell S. Tech. Journ.*, April 1940, Vol. 19, No. 2, pp. 221–248.)

2933. CONDENSERS FOR CRYSTAL FILTERS.—V. T. Renne & V. D. Alekseev. (*Elektrosvyaz*, No. 1, 1940, pp. 33–41: Russian only.)

The technical requirements of such condensers are discussed, and also the properties of dielectrics suitable for them. Quartz and mica condensers with silver electrodes are described, and results of tests are given which show that the latter type are preferable.

2934. SOME PROPERTIES OF A MAGNETOSTRICTIVE RESONATOR OF ROD TYPE, AND EXPERIMENTS ON A NARROW-BAND FILTER OF DIFFERENTIAL TYPE [Effect of Heat Treatment: Suitable Frequencies 10–100 kc/s: etc.].—M. Kobayashi & M. Endo. (*Nippon Elec. Comm. Eng.*, Jan. 1940, No. 19, p. 193: summary only.) *Cf.* 965 of March (where laminated vibrators were used).

2935. AN INVESTIGATION OF THE MAIN CIRCUITS OF A REGENERATIVE REPEATER [American Type using a Tuning-Fork Vibrator: with Oscillograms showing Phase Relationship between Incoming & Outgoing Currents: etc.].—Malyshev. (*Elektrosvyaz*, No. 6, 1939, pp. 124–136: Russian only.)

2936. BUILDING-UP PROCESSES IN BROADCAST BAND-FILTERS.—Gensel. (*See* 2987.)

2937. SIMPLE BAND-PASS X-CIRCUITS [Section IV—The Effect of the Finite Inductance of the Differential Transformer on the Course of the Effective Attenuation in Bridged-Pi & Bridged-T Circuits].—R. Rabe. (*T.F.T.*, Jan. 1940, Vol. 29, No. 1, pp. 25–29.) Conclusion of the paper referred to in 1364 of April.

2938. DESIGN OF LADDER-TYPE FILTER BY MEANS OF OPEN AND SHORT-CIRCUIT REACTANCES.—A. Matsumoto. (*Nippon Elec. Comm. Eng.*, Jan. 1940, No. 19, p. 138.) For previous work *see* 4339 of 1939.

2939. COMMENT ON "CONSTANT-POTENTIAL RECTIFICATION" [and the Relative Effectiveness of a Smoothing Filter on Three-Phase and Single-Phase Rectifiers].—Stevens & Walker. (*Wireless World*, June 1940, Vol. 46, No. 8, p. 291.) Criticism of a statement in the paper dealt with in 1796 of May. But see *ibid.*, July, p. 325.

2940. POLYNOMIAL QUADRIPOLES OF PRESCRIBED FREQUENCY VARIATION [Complete Solutions and Calculation of Circuit Elements for Realisation of Loss-Free Quadripoles between Arbitrary Ohmic Resistances: Prescribed Frequency Variation of Polynomial Form].—W. Bader. (*Arch. f. Elektrot.*, 15th April 1940, Vol. 34, No. 4, pp. 181–209.)

2941. CALCULATION OF TRANSIENT PHENOMENA IN A.C. CIRCUITS [Use of Operator of Form $f(d/dt)/(d/dt \pm j\omega)$].—G. Giorgi. (*Sci. Abstracts*, Sec. A, 25th April 1940, Vol. 43, No. 508, p. 325.) *See* also 1354 of April.

2942. RELAXATION OSCILLATIONS [General Study of Methods in relation to Mechanical, Electrical, & Biological Phenomena].—Herrender-Harker. (*Am. Journ. of Physics* [formerly *Am. Physics Teacher*], Feb. 1940, Vol. 8, pp. 1–22.)

2943. MUTUAL INTERFERENCE, AND ITS ELIMINATION, IN TWO LINE CIRCUITS PARALLEL TO EACH OTHER.—T. Hirota. (*Nippon Elec. Comm. Eng.*, Jan. 1940, No. 19, pp. 154–157.)

2944. THE APPROXIMATE CALCULATION OF THE ELECTRIC FIELD AND THE CAPACITIES FOR SOME SIMPLE FORMS OF TELEPHONE CABLE [Two-Wire and Spiral Quad, with and without Cylindrical Shielding].—H. Meinke. (*E.N.T.*, Feb. 1940, Vol. 17, No. 2, pp. 42–49.)

www.americanradiohistory.com

2945. THE CALCULATION OF CROSS MODULATION IN A MULTI-CHANNEL TRANSMISSION WITH A LARGE NUMBER OF CHANNELS.—A. L. Lubny-Gertsyk. (*Elektrosvyaz*, No. 6, 1939, pp. 63–70: Russian only).

The existing methods of calculating the cross modulation occurring when a number of frequency bands are passed through a common amplifier are criticised briefly, and a mathematical discussion is presented leading to the following results and conclusions: (1) Cross modulation is determined entirely by the average amplitude or power of the multi-channel frequency band; (2) the function determining the amplitude distribution of a multi-channel frequency band is similar to the Gaussian curve and is independent of the characteristics (type of oscillations, etc.) of individual channels; (3) formula 18 is derived for determining the noise level: this is calculated from the amplifier characteristic and the distribution function; and (4) cross modulation is calculated for a number of particular cases. It is shown that when a volume limiter is used, having a ceiling even three times as high as the average amplitude of the multi-channel frequency band, a considerable reduction in noise level is obtained.

2946. THE COMPENSATION OF THE OUTPUT IMPEDANCE AND THE REDUCTION OF TRANSIENT PROCESSES IN FEEDBACK AMPLIFIERS.—A. A. Rizkin. (*Elektrosvyaz*, No. 6, 1939, pp. 71–83: Russian only.)

The theory of a combined (voltage and current) complex-feedback and amplification (Fig. 1) is discussed, and methods are indicated for determining the coupling impedance (current feedback) necessary for complete compensation of the amplifier output impedance. The l.f. amplifier working into a transformer (Fig. 2) is then considered, and it is shown that complex current feedback not only compensates for the output impedance but also neutralises the transient processes due to the leakage impedance of the transformer; at the same time the phase/frequency characteristic of the amplifier at any load can be reduced to that corresponding to no-load conditions.

The operation of a push-pull amplifier using voltage feedback (Fig. 5) is then investigated, and conditions are established for the compensation of the output impedance and transient processes. The conclusions reached are discussed from the practical point of view.

2947. TRANSIENT PHENOMENA OF FEEDBACK AMPLIFIERS: II [Feedback Circuit having Series Resonance Characteristic: having Tuned Selectivity: containing Retardation Circuit: Analysis & Experiment].—Watanabe, Okamura, & Tutiya. (*Nippon Elec. Comm. Eng.*, Jan. 1940, No. 19, pp. 158–164.) For I *see* 952 of March.

2948. PAPERS ON THE INVERTED-TYPE SHORT-WAVE HIGH-POWER AMPLIFIER.—Tanaka. (*See* 2963 & 2964.)

TRANSMISSION

2949. VELOCITY-MODULATED BEAMS [Further Correspondence: Clavier's 1933 Treatment of Fluctuating Transit Times in Positive-Grid Micro-Ray Tube—Graphical Method applicable to Present Problem: etc.].—Kompfner, Strachey, Clavier. (*Wireless Engineer*, June 1940, Vol. 17, No. 201, pp. 262–263.) *See* 2545/2547 of July.

2950. CURRENT-FLOW CHARACTERISTICS IN VELOCITY-MODULATED VALVES [Graphical Treatment of Electron Paths in the "Heil Chamber," represented by Two Double Layers separated by Drift Tube].—M. Geiger. (*Physik. Berichte*, No. 7, Vol. 21, 1940, pp. 710–711.) *Cf.* Hollmann, 2544 of July.

2951. NATURAL OSCILLATIONS OF ELECTRICAL CAVITY RESONATORS [Measurements (and Theoretical Background) on Hollow Circular Cylinders, from the "Perfect-Coaxial" Type to the "Perfect-Cylindrical," including Special Cases of Resonators with Tubular Central Conductors (Open-Ended, for passage of Electron Beam), etc.].—W. L. Barrow & W. W. Mieher. (*Proc. Inst. Rad. Eng.*, April 1940, Vol. 28, No. 4, pp. 184–191.) The principle of similitude was proved to apply to all the forms examined.

2952. A METHOD OF LOADING MICRO-WAVE GENERATORS.—Morita. (*See* 3010.)

2953. HIGH-FREQUENCY BEHAVIOUR OF A SPACE CHARGE ROTATING IN A MAGNETIC FIELD [Theory, with Application to Magnetrons, etc.].—J. P. Blewett & S. Ramo. (*Phys. Review*, 1st April 1940, Ser. 2, Vol. 57, No. 7, pp. 635–641.)

Authors' summary:—A theoretical discussion is given of the propagation of electromagnetic waves in a space charge which is rotating under the influence of a uniform magnetic field. Equations are derived for the relations between the amplitudes of the electric and magnetic fields, charge density, electron velocities, the applied magnetic field, the frequency, the phase velocities, and the effective dielectric constant of the space-charge region. In particular, the natural frequencies are computed for such a space charge rotating about an infinitesimal conductor and enclosed by a coaxial conducting cylinder. The predicted resonant frequencies agree well with experimentally observed values for magnetron oscillators. The theory here developed is also applicable to other devices in which a rotating space charge is utilised.

2954. ON THE THEORY OF THE FOUR-SLIT MAGNETRON.—J. Möller. (*E.N.T.*, Feb. 1940, Vol. 17, No. 2, pp. 31–41.)

H. G. Möller's "ring current" theory of magnetron oscillations (63 of 1937) gave the surprising result that in a small magnetron, where the anode current was only a few milliamperes, the ring current must reach a value of over 1 ampere: J. Möller's measurements (64 of 1937) confirmed this. The former worker, by putting the angle of lag of the ring-current "breathing" equal, as a rough approxi-

www.americanradiohistory.com

mation, to $\omega\tau$ (τ being the electron path-time from the cathode to the reversing point), arrived at the condition $n = 1.5$ for a favourable setting-up of oscillations, where n represents the order of the oscillation and is given by ω_c/ω_s, the ratio of the angular velocity of the electrons about the filament ($= e/2m.\mathfrak{H}$) to the frequency of the associated circuit (anode segments and Lecher system). Other workers have found experimental values for the optimum ratio ranging from 1 to 1.6: thus Herriger & Hulster (1319 of 1937 and back ref.) found a maximum efficiency and pure-phase excitation for $n = 1.5$.

The present theoretical and experimental investigation had as its purpose the clearing up of these discrepancies and the refinement of H. G. Möller's theory. Measurements on a four-segment magnetron led to a value of $n = 1.1$ for maximum output and pure-phase excitation, while the theoretical value obtained was 1.12. The experimentally found relation between the current amplitude in the oscillatory circuit and the anode voltage, circuit damping, and wavelength is explained by the theory, and qualitative considerations on the calculation of the amplitude are discussed on pp. 40–41: the complete theory for a quantitative calculation is not yet available.

2955. AMPLITUDE MODULATION OF MAGNETRON OSCILLATORS, WITH SPECIAL REFERENCE TO GRID-MAGNETRONS [Experimental Comparison of Types with Auxiliary Electrode (Modulating Grid) in Five Different Positions].—S. Nakamura & S. Hoshina. (*Nippon Elec. Comm. Eng.*, Jan. 1940, No. 19, pp. 169–172.)

2956. THE EMPLOYMENT OF AN AMPLIFYING VALVE AS AN ELEMENT OF VARIABLE IMPEDANCE [for Phase Modulation, Automatic Tuning Correction, etc.].—Chireix. (*See* 2929).

2957. REACTANCE-TUBE FREQUENCY MODULATORS [a Push-Pull Modulator Circuit for minimising Frequency Instability, and the Use of Automatic Frequency Control].—M. G. Crosby. (*QST*, June 1940, Vol. 24, No. 6, pp. 46–50.)

2958. GETTING ON 56-MEGACYCLE FREQUENCY-MODULATION [Transmitting Methods: checking Linearity and Deviation].—G. Grammer. (*QST*, June 1940, Vol. 24, No. 6, pp. 16–20 and 106, 108.)

2959. NOTE ON MODULATION [with Reference also to Super-Regeneration, Circuits with Varying Parameter, etc: Analysis of Equation $d^2y/dt^2 + \epsilon(1 + k \cos t)y = 0$, whose Non-Periodic Solution is interpretable as Wave with Simultaneous Phase & Amplitude Modulation].—J. G. Brainerd. (*Proc. Inst. Rad. Eng.*, March 1940, Vol. 28, No. 3, pp. 136–139.) A further paper, soon to appear in *Phil. Mag.*, is mentioned.

2960. CATHODE MODULATION [giving a Combination of Grid-Bias and Anode Modulation: Theoretical & Experimental Investigation].—Spitzer, Nekut, & Waller. (*QST*, May 1940, Vol. 24, No. 5, pp. 38–39: long summary.) *Cf.* Edmonds, 551 of February.

2961. NARROW-BAND CONSTANT-LEVEL SPEECH AMPLIFICATION [Combining Band-Pass Filter and Output Limiter to give More Effective Modulation].—G. Turney & R. Shimer. (*QST*, May 1940, Vol. 24, No. 5, pp. 54–56.)

2962. ON THE METAL MODULATOR OF SHUNT TYPE AND OF SERIES TYPE [for Single-Sideband Carrier-Suppression Working], *and* ON THE MODULATION LOSS OF RING MODULATOR.—Y. Degawa. (*Nippon Elec. Comm. Eng.*, Jan. 1940, No. 19, pp. 139–142: pp. 143–147.)

2963. DETERMINING THE LIMIT OF STABLE OPERATION FOR SHORT-WAVE HIGH-POWER AMPLIFIERS [imposed by Back Couplings due to Residual Inductance, mainly in Neutralising Bridge-Circuit: Analysis of Effect, and Methods of Stabilisation].—N. Tanaka. (*Nippon Elec. Comm. Eng.*, Jan. 1940, No. 19, pp. 148–153.)

2964. INVERTED-TYPE SHORT-WAVE HIGH-POWER AMPLIFIER [and Its Advantages over Usual Neutralised Push-Pull Types, especially for Aerial Outputs over 50 kW].—N. Tanaka. (*Nippon Elec. Comm. Eng.*, Jan. 1940, No. 19, p. 192: summary only.) Developed from the work dealt with above, 2963.

2965. THE ELECTRICAL STABILITY OF TUBULAR INDUCTANCE COILS WITH DEPOSITED CONDUCTORS.—Thomas. (*See* 3120.)

2966. EXTENDED VARIABLE FREQUENCY CRYSTAL CONTROL [100 kc/s Variation at (*e.g.*) 80 m by One Variable-Gap Crystal & One Fixed].—B. Goodman: K. Hayes. (*QST*, May & June 1940, Vol. 24, Nos. 5 & 6, pp. 9–11 and 57 & 9–12 and 92 . . 96.)

Hayes's principle (the practicability of which is shown by the investigation here described) is to employ the 6 kc/s variation easily obtained from the variable-gap crystal, but to increase it to over 100 kc/s by beating the latter's ninth harmonic (arrived at by feeding its third harmonic to a frequency-tripler stage) against the ninth harmonic of the fixed crystal (similarly obtained) and then doubling the difference frequency thus formed.

2967. QUARTZ CRYSTALS: THEIR PIEZOELECTRIC PROPERTIES AND USE IN CONTROL OF HIGH FREQUENCY: PART I—HISTORY, THEORY, APPLICATIONS, AND PERFORMANCE.—C. F. Baldwin. (*Gen. Elec. Review*, May 1940, Vol. 43, No. 5, pp. 188–194.)

2968. SINGLE-DIAL FREQUENCY CONTROL: GANG-TUNED TRANSMITTER ALIGNED WITH RECEIVER CALIBRATION.—H. E. Rice, Jr. (*QST*, June 1940, Vol. 24, No. 6, pp. 30–37.)

2969. AN INEXPENSIVE ELECTRONIC KEY.—G. Grammer. (*QST*, May 1940, Vol. 24, No. 5, pp. 12–14 and 21.) Based on Beecher's article, 2562 of July.

2970. THE THEORY AND DESIGN OF THE FRICTION REGULATOR IN A BAUDOT TRANSMITTER.—N. B. Zeliger & S. I. Vinokur. (*Elektrosvyaz*, No. 6, 1939, pp. 96–120: Russian only.)

www.americanradiohistory.com

2971. RADIO PROGRESS DURING 1939: PART IV—TRANSMITTERS AND ANTENNAS [with 27 Literature References, All American].—(*Proc. Inst. Rad. Eng.*, March 1940, Vol. 28, No. 3, pp. 112–115.)

RECEPTION

2972. LINEAR RESONANCE PHENOMENA IN A SUPER-REGENERATIVE RECEIVER.—G. S. Gorelik. (*Elektrosvyaz*, No. 6, 1939, pp. 29–49: Russian only.)

It is shown that under certain conditions a super-regenerative receiver can be regarded as a linear system with variable parameters. The theory of a linear system is briefly discussed and is applied to such a receiver. A definition of resonance conditions in the receiver is given, and these conditions are discussed in detail. Methods are indicated for determining resonance oscillations in the receiver. It is pointed out that this paper is only concerned with the "quasi-linear" operation of the receiver, and that non-linear processes will be studied in a separate paper.

2973. DOUBLE FREQUENCY-CHANGING: ITS APPLICATION TO ULTRA-SHORT-WAVE RECEPTION.—D. W. Heightman. (*Wireless World*, June 1940, Vol. 46, No. 8, pp. 276–278.)

2974. BRIEF NOTES ON MAN-MADE VARIATIONS IN ULTRA-HIGH-FREQUENCY RECEIVED FIELDS ["Moving Nulls" (producing 40 db Variations) due to Moving Vehicles, Steel Doors, Lifts, Switching-On & Off of Lights, etc: Frequencies 21–120 Mc/s].—J. N. A. Hawkins. (*Proc. Inst. Rad. Eng.*, April 1940, Vol. 28, No. 4, pp. 195–196: summary only.) The writer is a research engineer for Walt Disney Productions.

2975. "MODERNE KURZWELLEN-EMPFANGSTECHNIK" [Short- & Ultra-Short-Wave Receiving Technique: Book Review].—M. J. O. Strutt. (*Zeitsch. f. tech. Phys.*, No. 4, Vol. 21, 1940, p. 96.)

2976. ON THE QUANTITATIVE CARRYING-THROUGH OF THE SPACE-CHARGE AND BORDER-LAYER THEORY OF THE CRYSTAL RECTIFIER [Copper-Oxide, Selenium, & "Cat's Whisker" Types: Semiconductor (Electron-Impoverishment) Theory, with Experimental Confirmation and Guiding Lines for Improvement].—W. Schottky & E. Spenke. (*Sci. Abstracts*, Sec. B, 25th April 1940, Vol. 43, No. 508, p. 184: *Physik. Berichte*, No. 5, Vol. 21, 1940, pp. 532–533.) For previous work *see* 4682 of 1939.

2977. SELECTIVE DETECTION.—E. G. Momot. (*Elektrosvyaz*, No. 6, 1939, pp. 3–28: Russian only.)

The writer proposes a selective circuit consisting essentially of detector, l.f. filter, and synchronous heterodyne oscillator. Two controlling grids, "receiving" and "modulating," are used in the detector. Voltages corresponding to the wanted and interfering signals are applied to the "receiving" grid, while the oscillator output is fed to the "modulating" grid (Fig. 1). The oscillator is synchronised by pulling-in, by applying the wanted signal also to the grid of the oscillator. Intermodulation between wanted and interfering signals therefore takes place in the oscillating circuit and at the modulating grid, and additional detected currents appear in the output of the detector. A second channel, *via* the modulating grid, is thus provided for the wanted signal.

The operation of the circuit is complicated, and is discussed in detail. It is claimed that an almost ideal pi-shaped selectivity curve can be obtained, and that when the circuit is used in place of an ordinary detector the selectivity of the receiver can be raised several hundred times. Methods are indicated for the design of the circuit, and the necessary simplified formulae are derived. Some experimental data are given.

2978. AN INVESTIGATION OF SIMULTANEOUS DETECTION OF TWO MODULATED SIGNALS OF DIFFERENT INTENSITIES AND LARGELY DIFFERENT FREQUENCIES, WHEN THE INERTIA OF THE DETECTOR IS TAKEN INTO ACCOUNT.—L. N. Loshakov. (*Elektrosvyaz*, No. 6, 1939, pp. 50–62: Russian only.)

The conclusions reached by Appleton (1932 Abstracts, pp. 343, 405, & 523) and Aiken (1933 Abstracts, p. 392) are only applicable to the limiting case when the maximum suppression of the weak signal is obtained; both treatments neglected the effect of load on the operation of the detector. The writer therefore gives a mathematical treatment of the simultaneous detection of two signals when the single detector valve is loaded by a resistance-shunted capacity; the difference p between the two carrier frequencies is assumed to lie outside the audio range.

The inertia of the detector with regard to p is taken into account, and a method is indicated for estimating this. The coefficients of suppression, k_1 and k_2, are determined, and the relationship between these on the one hand and $1/pRC$ and U_{m2}/U_{m1} on the other is examined in detail (U_{m2} and U_{m1} being the amplitudes of the carrier frequencies of the weak and strong signal respectively).

2979. SERIES NOISE LIMITER WITH PLATE DETECTORS [Series-Diode Noise Limiter modified to work with Plate Detector instead of with Infinite-Impedance Detector].—P. Rafford, Jr: Bacon. (*QST*, May 1940, Vol. 24, No. 5, p. 58.) *See* 102 (and 99) of January.

2980. NOTE ON SUPPRESSION OF IGNITION INTERFERENCE ON FREQUENCIES BETWEEN 40 AND 60 Mc/s.—Scholz & Faust. (*QST*, May 1940, Vol. 24, No. 5, p. 39.) *Cf.* 980 of March.

2981. FIELD STRENGTH OF MOTOR-CAR IGNITION BETWEEN 40 AND 450 MEGACYCLES.—R. W. George. (*Proc. Inst. Rad. Eng.*, March 1940, Vol. 28, No. 3, p. 145: summary only.)

2982. SUPPRESSION AND THE PETROL ENGINE: DO ANTI-INTERFERENCE MEASURES IMPAIR PERFORMANCE?—C. Attwood & B. Cole. (*Wireless World*, June 1940, Vol. 46, No. 8, pp. 288–290.) Concluded from 1830 of May, where German work is also referred to.

www.americanradiohistory.com

2983. CURRENTS INDUCED IN WIRES BY HIGH-FREQUENCY ELECTROMAGNETIC FIELDS.—Alford. (*See* 3012.)

2984. CAUSES OF THE CORRUGATION OF THE OVERHEAD CONDUCTOR [of Electric Trams, etc: with Special Reference to Broadcast Interference].—H. Ångström. (*Handlingar Ingeniörs Vetenskaps Akademien*, Stockholm, No. 152, 1939.) For other papers from various sources *see* 2743, 3190, 3923, & 4333 of 1938; 1442 of 1939; and 1833 of May.

2985. A NULL-POINT DEVICE FOR INTERFERENCE SUPPRESSION [of a Motor driven off One Phase of a 3-Phase System: Method of Connection giving No Current through Suppressing Condenser].—W. Bloch. (*Bull. Assoc. suisse des Élec.*, No. 7, Vol. 31, 1940, pp. 166–167: in German.)

2986. METHODS OF CONTROLLING RADIO INTERFERENCE [Insulators (including Use of Glaze: Losses may be Decreased or Increased: Asphalt Emulsion): Shielding: Low-Impedance Shunt Filters: Make-&-Break Contacts: High-Impedance Filters: etc: Discussion].—C. V. Aggers. (*Elec. Engineering*, April 1940, Vol. 59, No. 4, Transactions pp. 193–201.)

2987. BUILDING-UP PROCESSES IN BROADCAST BAND-FILTERS.—J. Gensel. (*T.F.T.*, Jan. 1940, Vol. 29, No. 1, pp. 17–25.)

Author's summary:—"For the calculation of building-up processes by means of a formula originally due to W. Deutsch [in 1918], the simplifying approximations usually made in the calculation of band-filters with a narrow pass-band are here employed. The assumptions necessary for the validity of the Deutsch formula, and the mathematical operations required for its use, are made physically clear by considering the band-filter as composed of oscillatory circuits coupled by valves.

"The building-up process is described by the behaviour of the building-up function [$\phi(t)$ in eqn. 4, which is derived from eqn. 3 by replacing the applied angular frequency ω by Ω, where $j\Omega = \tau\,(j\omega - j\omega_m)$, τ being the time constant of the filter and ω_m the mid-band frequency], which is represented by a locus curve, passed through in time, of the complex ϕ plane [this locus curve is obtained point by point by giving λ, the time parameter which equals t/τ for single-circuit filters and $t/2\tau$ for double-circuit, all successive values from zero to infinity, and calculating for each the value of the function $\phi(\lambda)$]. In this way the field of application of complex locus curves is extended to deal with building-up processes.

"The building-up characteristics—as we call these locus curves—are drawn for the single-circuit band filter [Fig. 8] and for a two-circuit filter with a 15% plateau dip (form factor = 1 [section B7]), and it is explained how these curves are to be read. They show that during a building-up process not only an amplitude modulation occurs but also a frequency modulation; that is, that both amplitude and frequency swing from an initial value to the stationary value. An example is worked out showing how the temporal course of amplitude and frequency can be obtained. The amplitude-building-up and the frequency-building-up curves are discussed and their most important qualities brought out, and finally the connection with the building-up time of a band-filter, as defined by Küpfmüller, is established."

2988. NEW CONSIDERATIONS ON SINGLE KNOB TUNING IN SUPERHETERODYNES [including Short- and Ultra-Short-Wave Reception].—M. Santoro. (*Alta Frequenza*, April 1940, Vol. 9, No. 4, pp. 208–236.)

"In a previous paper [981 of 1939] a method of calculation was proposed for the values to be given to the various elements, inductances and capacities, composing the input circuit or circuits and the local-oscillator circuit of a superheterodyne receiver, in relation to all the various combinations of circuits hitherto used to obtain single-knob control of the variable condensers. The alignment errors resulting from the employment of such a method of calculation differ very little from those which could be obtained by determining the values of the various components by a rigorous method of calculation," the labour of which would not be justified by the tracking improvement obtained (some 0.05% on medium waves and 0.008% on short).

"In the present article, after having proved analytically the impossibility of single-knob tuning on the basis of four alignment frequencies instead of the usual three, it is shown how it is possible, without excessive complications either in the calculations or in the circuits, to obtain an alignment not hitherto attained, and considerably superior even to that resulting, with the usual circuits, from a rigorous calculation of the various components." The usual input circuit is represented in Fig. 1 (tuning condenser and trimmer both in parallel with inductance), while the usual oscillator circuit may be according to either Fig. 2 or Fig. 3 (padding condenser C_1 in series with tuning condenser C_2, and trimmer C_3 either across C_2 or across the series combination of C_1 and C_2: it is shown analytically in an appendix that these two arrangements are really equivalent). The improved arrangement here recommended is the use of Fig. 2 or 3 also for the input circuit, instead of Fig. 1, so that both input and oscillator circuits are of the same type, with padding condenser as well as trimming condenser. The reason for the improved performance (based on the shapes of the hyperbolae representing f_1 and $f_2 - f_0$) is discussed in detail on pp. 213–216, with an example worked out in the subsequent pages; curves 1 and 2 of Fig. 5 show the tracking errors for the old and new arrangements respectively.

Of the rest of the paper, section 4 deals with the belief, held by many technicians, that as soon as a short wave is to be received the "series compensator" (padding condenser) may be short-circuited, without reducing the sensitivity of the receiver: this is a mistake, and the padding condenser is desirable for short and even ultra-short waves, to avoid not only increased tracking errors (Fig. 6), but also a decreased image-frequency ratio caused by the diminished sensitivity and selectivity of the h.f. circuits. Section 5 considers the degree

www.americanradiohistory.com

of accuracy which the values of the circuit components should possess for good results, and section 6 gives graphs which simplify the calculation of the input circuits and also a simplified method of calculation for the oscillator, where the construction of graphs is difficult owing to the number of variables. For Wald's *Wireless Engineer* article on padding curve calculation *see* 1839 of May.

2989. SIMPLIFYING PUSH-BUTTON TUNING: CONDENSER WITH 60-DEGREE ROTATION [removing Disadvantages of Simple "Mechanical" System].—Torotor Company. (*Wireless World*, June 1940, Vol. 46, No. 8, p. 286.) Note on a Danish firm's production.

2990. REMOTE CONTROL OF ROTARY SWITCHES [such as Wave-Band Switches in Receivers: Electro-Mechanical Link employing a Geneva Movement].—J. B. Rudd & D. Craig. (*A.W.A. Tech. Review*, No. 1, Vol. 5, 1940, pp. 1–19.)

2991. FREQUENCY-METERING RECEIVERS.—G. Latmiral. (*Alta Frequenza*, April 1940, Vol. 9, No. 4, pp. 195–207.)

The writer first discusses the inaccuracy of the calibration of ordinary commercial receivers, and the factors responsible for it, particularly temperature variations (a 20° change being liable to cause a frequency variation of the order of 10^{-3}); the replacement, ageing, or working-voltage fluctuation of the valves (usually less serious than the temperature effect); and the interactions in the mixing stage (especially when an octode or pentagrid converter is used to combine oscillator and mixer functions: if the calibration is to be constant within 1‰, either a beam-tube octode must be used, or better still separate valves: if the stability is to exceed 10^{-4}, the plan of obtaining hand or automatic sensitivity control by acting on the voltage of the signal grid must be given up, owing to the effect on the space-charge density and distribution, and consequently on the first-grid/cathode capacity and the tuning).

After applying the above considerations to the outline of a frequency-metering receiver of moderate precision (around 10^{-3}) and indirect reading, the writer passes on to the design of a high-precision portable instrument (accuracy not inferior to 10^{-4}) with direct reading, covering the wave-range 2700–25 100 kc/s in three overlapping bands. No careful design of condenser-plate profiles can give the required precision of linear variation in all three bands, so the artifice is used of making the oscillator function always in one band (working range 3200–6400 kc/s) and utilising its second and fourth harmonics for the higher-frequency bands, the i.f. being 500 kc/s in all cases. In the three bands the accuracy with which readings can be made is 0.25, 0.5, and 1 kc/s, respectively: a micrometer adjustment is provided. For periodic checking of the heterodyne-oscillator calibration, a quartz-controlled oscillator is embodied in the instrument: this works on 100 kc/s, and its fifth harmonic gives 33 points of checking with the heterodyne fundamental; 32 other points are given by its higher harmonics beating with the second harmonic of the heterodyne. "The plan of introducing the quartz harmonics directly, and by means of an aperiodic coupling, into the mixing stage can well be applied also to frequency-metering receivers with indirect reading and of lower precision, to increase the number of control points. . . ." A thermometer is mounted on the front panel so that, when special accuracy is required, a correction can be made for temperature: the temperature coefficient of the quartz oscillator is -2×10^{-6} per degree Centigrade.

2992. CRYSTAL CONTROL OF THE MIXER OSCILLATOR IN A SUPERHETERODYNE RECEIVER: II.—J. E. Benson. (*A.W.A. Tech. Review*, No. 1, Vol. 5, 1940, pp. 29–40.)

The crystal-oscillator mixer for frequencies up to 7 Mc/s (990 of March) can be used conveniently up to 28 Mc/s by heterodyning the signal with the second or fourth harmonic of the crystal frequency. An alternative method is described, and also a combination of the two methods for frequencies up to 56 Mc/s. In all cases the fundamental frequency does not exceed 7 Mc/s.

2993. CONVERSION DEAD POINTS OF CONVERTER IN RECEIVER [Unexpected Appearance of Dead Points (i) when Excessive Heterodyne Voltage is applied to Screen Grid of Tetrode, (ii) when Signal-Grid Bias is changed, in Pentagrid Converter, & (iii) when Modulated Wave receives a Phase Variation while passing through Filter: Investigation of First Two Cases].—H. Seki. (*Nippon Elec. Comm. Eng.*, Jan. 1940, No. 19, pp. 173–177.)

2994. REACTANCES WITH NEGATIVE INDUCTIVE OR CAPACITIVE CHARACTERISTICS [as in A.T.C. Circuits].—Vilbig. (*See* 2928.)

2995. THE EMPLOYMENT OF AN AMPLIFYING VALVE AS AN ELEMENT OF VARIABLE IMPEDANCE [for Automatic Tuning Correction, etc.].—Chireix. (*See* 2929.)

2996. SOME CIRCUITS FOR INTER-STATION MUTING AND AUDIO A.V.C.—S. J. Watson. (*A.W.A. Tech. Review*, No. 4, Vol. 4, 1939, pp. 139–154.)

Author's summary:—"In a broadcast receiver in which the audio driver is either a 6L7G [pentagrid] or a 6G8G [Australian Radiotron duplex-diode pentode], inter-station muting and audio a.v.c. can be achieved without the addition of an extra valve. A reduction of inter-station noise of 20 db is easily obtained. The 6G8G circuit is of particular interest on account of the simplicity of the circuit and the small number of components involved."

2997. A GENERAL-PURPOSE COMMUNICATION RECEIVER [10-Valve Superheterodyne, Standard Frequency Range 120 kc/s to 20 Mc/s: with Beat Oscillator, Crystal Filter, Signal-Strength Meter, etc.].—A. L. Green & J. B. Rudd. (*A.W.A. Tech. Review*, No. 4, Vol. 4, 1939, pp. 181–197.)

2998. RADIO PROGRESS DURING 1939: PART V—RADIO RECEIVERS [with 55 Literature References, chiefly American].—(*Proc. Inst. Rad. Eng.*, March 1940, Vol. 28, No. 3, pp. 116–119.)

www.americanradiohistory.com

2999. "THE SUPERHETERODYNE RECEIVER: FOURTH EDITION" [Book Review].—A. T. Witts. (*Elec. Review*, 24th May 1940, Vol. 126, p. 567.) Extensively revised.

3000. TEST REPORT: PHILIPS MODEL 805A [with "Silentron" (Pentode with Aligned Grids) R.F. Stage, and 470 kc/s I.F. to reduce Second-Channel Interference].—(*Wireless World*, June 1940, Vol. 46, No. 8, pp. 294–295.)

3001. TEST REPORT: BEETHOVEN "LITTLE PRODIGY" [All-Dry Portable].—(*Wireless World*, June 1940, Vol. 46, No. 8, p. 311.)

3002. NEW MURPHY RECEIVERS [Mains and Battery Short-Wave "Specials" A92 and B91].—(*Wireless World*, June 1940, Vol. 46, No. 8, p. 303.)

3003. PRINCIPLES OF FAULT-TRACING: PART I—LOGICAL PROCEDURE *versus* HIT-OR-MISS.—W. H. Cazaly. (*Wireless World*, June 1940, Vol. 46, No. 8, pp. 279–282.)

3004. THE CONNECTION OF SEVERAL LOUDSPEAKERS TO THE RECEIVER [Conditions for Satisfactory Working, for Loudspeakers of Same Frequency Range & Output, Same Frequency Range & Different Outputs, etc.].—M. Wünsch. (*Funktech. Monatshefte*, March 1940, No. 3, pp. 41–44.)

3005. NEW TYPE OF D.C./A.C. VIBRATOR INVERTER [Circuit for Zero Current at "Break": Applications include Police-Car Receivers, Television Receivers in D.C. Districts, Aircraft, Isolated Farms, etc.].—O. Kiltie. (*Elec. Engineering*, April 1940, Vol. 59, No. 4, Transactions pp. 245–248.)

3006. EFFECTS OF HUM-BUCKING CONSTRUCTION AND MAGNETIC SHIELDING IN A.F. TRANSFORMERS [30 db Reduction by dividing Windings & mounting on Separate Legs: 27 db by Triple-Concentric-Shell (Mu-Metal) Shielding].—D. Fortune. (*Proc. Inst. Rad. Eng.*, April 1940, Vol. 28, No. 4, p. 196: summary only.)

3007. WATER TUBING AS RECEIVER GROUND.—Handa. (*See* 3021.)

AERIALS AND AERIAL SYSTEMS

3008. MULTI-UNIT ELECTROMAGNETIC HORNS [for Radiating or Receiving for Special Purposes (Broad-Band Point-to-Point Communication, Height & Distance Indication, etc.): Theory, and Experiments on 8.3 cm Wavelength: Many Advantages].—W. L. Barrow & C. Shulman. (*Proc. Inst. Rad. Eng.*, March 1940, Vol. 28, No. 3, pp. 130–136.)

3009. THE MOVEMENT OF ELECTROMAGNETIC WAVES IN A CONE-SHAPED HORN.—H. Buchholz. (*Ann. der Physik*, Feb. 1940, Ser. 5, Vol. 37, No. 3, pp. 173–225.)

From the AEG laboratories; for previous work *see* 2129 of June. Author's summary:—"The work is concerned with the propagation of electromagnetic waves from a radiating source situated in the interior of an infinitely long hollow cone with perfectly conducting shell surface. Only such radiators are considered as produce axially symmetrical waves: of these there are two types, the electric and the magnetic transverse waves. In Part I the mathematical form of the primary Hertz vector most suitable for both these cases is derived.

"Part II deals with the process of propagation for the electric transverse wave. The whole wave-field in the cone falls into an infinite number of component fields each having one possible propagation process. The degree of the spherical function and the order of the cylindrical function governing the local propagation of each component wave correspond to the infinite number of roots of the equation $P_n^{-1}(\cos\alpha) = 0$ with respect to n. The amplitude of each component wave decreases away from the emitter at first fairly slowly; then, as rk [wavelength in free space $= 2\pi/k$] passes through the value $n + 0.5$, a region of very rapid decrease occurs, and finally, still further off, the amplitude sinks as for a free space wave. The phase velocity of the wave approaches with increasing distance the velocity of light, from values exceeding this [p. 189]. The radial impedance is predominantly inductive in the near zone, then swings over very quickly to real values, and approaches, in the wave zone, the real resistance 120π ohms [the "radial impedance" is defined by Schelkunoff (1740 of 1938) as the ratio of the electric and magnetic field components, which has the dimensions of an impedance: p. 193]. As regards the energy flow in the horn, in the zone close to the emitter the wattless component is predominant, whereas in the wave zone it is very small compared with the active component [pp. 196–199]. Finally, the natural oscillations of a cone closed by a spherical cap are investigated [pp. 199–201: a hollow space is thus formed, enclosed by metallic surfaces: "such hollow spaces have often recently been used as frequency stabilisers in connection with magnetrons, and the closed cone here dealt with can be included among the forms suitable for this purpose"].

"Part III deals with the magnetic transverse wave. All the formulae corresponding to those for the electrical case are first set out. For the component waves the roots of the equation $P_n(\cos\alpha) = 0$ are here the determining values. Qualitative differences in the behaviour of the two types of wave do not emerge. Then the propagation of a magnetic transverse wave in a double cone is considered [space between two coaxial cones of different apical angle—*see* Fig. 13], and the nature of the natural oscillations of which it is capable when closed by a spherical cap is investigated. Finally, another relation for the primary Hertz vector is obtained for the case where the wave propagating in the [simple] cone proceeds from a coaxial conductor [or a true wave guide] opening into the apex of the cone [pp. 210–213: the next pages (section IV) discuss the difficulties in adapting the theory of the infinite cone to the case of a cone of finite length]. In the Appendix the numerous formulae, from the theory of spherical functions, needed in the work are derived."

www.americanradiohistory.com

3010. A METHOD OF LOADING MICRO-WAVE GENERATORS [Experimental & Theoretical Study of How the Maximum Power can be transmitted to Aerial (Dipole with & without Parabolic Reflector): Advantages of Symmetrical Multiple (Six-Wire) Feeder over Coaxial: Equivalent Load Resistance for Maximum Output, for Magnetron].—K. Morita. (*Nippon Elec. Comm. Eng.*, Jan. 1940, No. 19, pp. 182–187.) For previous work *see* 4428 of 1939.

3011. ULTRA-HIGH-FREQUENCY LOOP ANTENNAE [to serve as Elements in Radiating Systems of Localisers and Radio Ranges for guiding Aircraft, and as Receiving Aerials for Aircraft: radiating only Horizontally Polarised Waves: Analysis: Design of Three Types].—A. Alford & A. G. Kandoian. (*Elec. Communication*, April 1940, Vol. 18, No. 4, pp. 255–265.) A.I.E.E. Winter Convention paper.

3012. CURRENTS INDUCED IN WIRES BY HIGH-FREQUENCY ELECTROMAGNETIC FIELDS [Theory & Experiment: Induced Currents Not Even Approximately Sinusoidally Distributed (except when Resonance Phenomena predominate): etc.].—A. Alford. (*Proc. Inst. Rad. Eng.*, March 1940, Vol. 28, No. 3, p. 145: summary only.) For previous papers *see* 1130 of March & 2021 of May: *also* 2962 of 1937.

3013. DISCUSSION ON "THE ELECTRIC AND MAGNETIC FIELDS OF A LINEAR RADIATOR CARRYING A PROGRESSIVE WAVE."—L. Lewin: Colebrook. (*Journ. I.E.E.*, May 1940, Vol. 86, No. 521, p. 484.) *See* 1859 of May.

3014. SCREENED FRAME AERIALS: WRONG AND RIGHT IDEAS ABOUT HOW THEY REDUCE INTERFERENCE.—"Cathode Ray." (*Wireless World*, June 1940, Vol. 46, No. 8, pp. 304–308.)

3015. LIMITATIONS OF MUSA SYSTEMS DUE TO SCATTERING IN E REGION.—Eckersley. (*See* 2881, above.)

3016. A SINGLE-SIDEBAND MUSA RECEIVING SYSTEM FOR COMMERCIAL OPERATION ON TRANSATLANTIC RADIO-TELEPHONE CIRCUITS.—F. A. Polkinghorn. (*Proc. Inst. Rad. Eng.*, April 1940, Vol. 28, No. 4, pp. 157–170: *Bell S. Tech. Journ.*, April 1940, Vol. 19, No. 2, pp. 306–335.) A summary was referred to in 116 of January: for a corresponding G.P.O. system of modified design *see* Gill, 1778 of 1939.

3017. RADIO PROGRESS DURING 1939: PART IV—TRANSMITTERS AND ANTENNAS [with 27 Literature References, All American].—(*Proc. Inst. Rad. Eng.*, March 1940, Vol. 28, No. 3, pp. 112–115.)

3018. REPLACEMENT OF THE MAIN AERIAL SYSTEM AT RUGBY RADIO STATION.—F. Hollinghurst & H. F. Mann. (*P.O. Elec. Eng. Journ.*, April 1940, Vol. 33, Part 1, pp. 22–27.)

3019. THE ERECTION OF A 220 FT WIRELESS MAST [Black-Bore Casing with Screwed Joints].—Airsales Broadcasting. (*Engineer*, 14th June 1940, Vol. 169, pp. 532–533 and 536.) At Newcastle, N.S.W.

3020. MECHANICAL CALCULATION OF THE CONDUCTORS OF OVERHEAD ELECTRIC LINES [Universal Method based on Catenary: Voluminous Bibliography].—G. Silva. (*Rev. Gén. de l'Élec.*, 30th March/6th April 1940, Vol. 47, No. 13/14, pp. 235–261.)

3021. WATER TUBING AS RECEIVER GROUND [Over 60% Listeners in Hirosima use Water System as Earths: Resistance (measured Statically) 0.2 Ohm: 70–80 Ohms at 850 kc/s: etc.].—M. Handa. (*Nippon Elec. Comm. Eng.*, Jan. 1940, No. 19, p. 193: summary only.)

VALVES AND THERMIONICS

3022. CURRENT-FLOW CHARACTERISTICS IN VELOCITY-MODULATED VALVES.—Geiger. (*See* 2950.)

3023. A WIDE-BAND INDUCTIVE-OUTPUT AMPLIFIER [10 Watts Output at 500 Mc/s].—Haeff & Nergaard. (*Proc. Inst. Rad. Eng.*, March 1940, Vol. 28, No. 3, pp. 126–130.) A summary was dealt with in 128 of January.

3024. PARTIAL-SPLIT-ANODE MAGNETRON [for Very Short B-Type Waves: Multiple Splitting increases Capacity between Anode Segments, avoided by Splitting into One Large & Two Small Segments ("Partial Split"): Wide Frequency Range (convenient for Wavemeter Calibration, etc.)].—K. Owaki. (*Nippon Elec. Comm. Eng.*, Jan. 1940, No. 19, pp. 188–191.) For a different kind of "partial splitting" *see* Linder, 591 of February.

3025. THE H.F. BEHAVIOUR OF A SPACE CHARGE ROTATING IN A MAGNETIC FIELD, *also* ON THE THEORY OF THE FOUR-SLIT MAGNETRON, *and* AMPLITUDE MODULATION OF MAGNETRON OSCILLATORS, WITH SPECIAL REFERENCE TO GRID-MAGNETRONS.—Blewett & Ramo: Möller: Nakamura & Hoshina. (*See* 2953/2955.)

3026. GRID-INDUCTION NOISE IN VACUUM TUBES AT ULTRA-HIGH FREQUENCIES [Additional Source of Valve Noise].—S. Ballantine. (*Proc. Inst. Rad. Eng.*, March 1940, Vol. 28, No. 3, pp. 143–144: summary only.) A "quantitative elaboration" of the theory of the effect pointed out in the paper dealt with in 1928 Abstracts, p. 582.

3027. RADIO PROGRESS DURING 1939: PART II—ELECTRONICS [Cathode-Ray & Television Tubes, U.H.F. & Other Valves, Photo-electric Devices, etc: with 114 Literature References, chiefly American & German].—(*Proc. Inst. Rad. Eng.*, March 1940, Vol. 28, No. 3, pp. 103–108.)

www.americanradiohistory.com

3028. THE THEORY OF THE THERMIONIC DIODE [with Cylindrical Electrodes, taking Account of Distributed Initial Velocities: Space-Charge-Limited and Saturated Diodes].—E. L. E. Wheatcroft. (*Journ. I.E.E.*, May 1940, Vol. 86, No. 521, pp. 473–484.)

"Such calculations are of considerable importance in the study of thermionics and in filament design," the cylindrical diode being the simplest system which can be constructed in practice, and having the further advantage that the contact p.d. can be measured directly by Oatley's magnetron method (3425 of 1936).

3029. SIMILARITY LAWS IN THE THEORY OF ELECTRONIC VALVES [Dimensional Considerations leading to a General Formula useful in planning Model Tests at More Convenient Frequencies, and in measuring Secondary Emission].—L. Oertel. (*Telefunken-Röhre*, No. 16, 1939, pp. 164–176.)

3030. THEORY OF THE SECONDARY-ELECTRON EMISSION FROM METALS.—A. E. Kadyschewitsch. (*Journ. of Phys.* [of USSR], No. 2, Vol. 2, 1940, pp. 115–129: in German.)

Author's summary:—"The mechanism of secondary emission is considered and the rôle of the free passage of the primary and secondary electron determined. It is shown that the fundamental behaviour of secondary emission is chiefly determined by the ratio of Λ_1 (the path length traversed by a primary electron before it is transformed into a 'slow' electron) to Λ_2 (the free path length of the secondary electron). The secondary emission increases as the energy of the incident electron increases, so long as Λ_1/Λ_2 is less than 0.56; reaches a maximum when the ratio attains that value: and then decreases for a further increase of the incident electron. The course of the curve is in good agreement with experimental results. The dependence of the magnitude of the emission on the angle of incidence of the primary-electron beam is also found, as well as the velocity distribution of the secondary electrons and the directions of their emergence from the metal."

3031. SPACE-CHARGE RELATIONS IN TRIODES, AND THE CHARACTERISTIC SURFACE OF LARGE VACUUM TUBES [Theory & Experiment: Simplified Determination of Static Curves from Few Measurements at Low Power: Effect of Secondary Emission: etc.].—E. L. Chaffee. (*Proc. Inst. Rad. Eng.*, March 1940, Vol. 28, No. 3, p. 143: summary only.)

3032. A NEW DESIGN OF ELECTROLYTIC TROUGH FOR THE DETERMINATION OF POTENTIAL FIELDS [Error due to Wattless Component in Diagonal avoided by Differential Condenser across Unwanted Probe/Electrodes Capacity: Imperfections of Mechanical Transmission removed by Use of Optical System].—J. Himpan. (*Telefunken-Röhre*, No. 16, 1939, pp. 198–209.)

3033. FORCED-AIR *versus* WATER COOLING OF VACUUM TUBES [Mathematical Expressions for Effectiveness: Limitations of Air-Cooling Devices: Rules for Design].—I. E. Mouromtseff. (*Proc. Inst. Rad. Eng.*, March 1940, Vol. 28, No. 3, p. 143: summary only.)

3034. ANODE EFFECT AS A FUNCTION OF TEMPERATURE.—P. L. Copeland. (*Phys. Review*, 1st April 1940, Ser. 2, Vol. 57, No. 7, pp. 625–634.)

For the "anode effect" *see* 1427 of April and back reference; *also* Nottingham, 1461 of 1936. Experimental results here described indicate "(1) that with the grid at or near room temperature, its surface charge may be high enough to shift its effective contact potential by as much as two or three volts, and (2) that the magnitude of the surface charging decreases rapidly with temperature." Time studies for the drift of contact potential were also made; it is suggested "that the drifts involve groups of electrons with different binding forces; so that the effective time constant of the discharge of the surface varies continuously during the history of the drift."

3035. EXPERIMENTS ON THE PERIODIC DEVIATION FROM THE "SCHOTTKY LINE."—W. B. Nottingham. (*Phys. Review*, 15th May 1940, Ser. 2, Vol. 57, No. 10, p. 935.)

Measurements confirming the discovery of Seifert & Phipps (617 of February) but showing the amplitude of deviations (as well as the location of maxima & minima) to be independent of temperature: "it does not appear that either of the theories so far suggested [618 of May and 2596 of July] is capable of explaining the observed facts."

3036. NEUTRALISATION AND IONISATION ON A THORIATED TUNGSTEN SURFACE [Coefficient of Neutralisation increases, That of Ionisation decreases, with Increase of Degree of Activation of Surface: Thorium Film possesses a Non-Uniform (Spotted) Structure: etc.].—Morgulis, Bernadiner, & Djatlovitzkaja. (*Journ. of Phys.* [of USSR], No. 1, Vol. 2, 1940, pp. 25–38: in English.)

DIRECTIONAL WIRELESS

3037. SYMPOSIUM ON "THE CAA-MIT INSTRUMENT-LANDING RESEARCH."—(*Proc. Inst. Rad. Eng.*, March 1940, Vol. 28, No. 3, p. 146: summary only.)

3038. THE DEVELOPMENT OF THE CIVIL AERONAUTICS AUTHORITY INSTRUMENT-LANDING SYSTEM AT INDIANAPOLIS.—Jackson, Alford, Byrne, & Fischer. (*Elec. Communication*, April 1940, Vol. 18, No. 4, pp. 285–302.) Using the aerial dealt with in 3039, below; for previous references to the CAA system *see* 1889 of May, and 3037, above.

3039. ULTRA-HIGH-FREQUENCY LOOP ANTENNAE.—Alford & Kandoian. (*See* 3011.)

3040. MANIPULATING THE MICRO-WAVES [particularly the Work of the M.I.T. on Instrument-Landing System, Cavity Resonators, Refraction in Lower Atmosphere, Distance Determination, etc.].—E. L. Bowles. (*Technology Review* [of M.I.T.], May 1940, Vol. 42, No. 7, pp. 279–281 and 292 .. 296.)

3041. DIRECTION-FINDING AT 1.67-METRE WAVES [Results in tracking Radio-Sonde Balloons].—L. C. L. Yuan. (*Science*, 31st May 1940, Vol. 91, p. 524.)

From the California Institute of Technology.

www.americanradiohistory.com

"Using an Adcock antenna the azimuth of the incoming wave can be defined within one half degree accuracy, and with a slight modification [accomplished within a few seconds] of the receiving elements to form a horizontal H antenna, the vertical angle . . . can also be obtained with the same degree of accuracy. . . . The main difficulty of this experiment seems to lie in the surface conditions of the ground in the vicinity of the receiving antenna. When the ground is wet, and especially when the moisture is not uniformly distributed, deviation . . . arises. Attempts are now being made to overcome this difficulty." *Cf.* 2602 of July (Smith-Rose & Hopkins).

3042. THE PERFORMANCE AND LIMITATIONS OF THE COMPENSATED LOOP DIRECTION-FINDER [Disadvantages, compared with Adcock System, of both Single-Dipole- & Double-Dipole-Compensated Types, except that S-D Type has Much Greater Pick-Up, and Moderate Polarisation Error on Ground of Good Conductivity: Possible Improvement by Artificial Increase of Conductivity].—R. H. Barfield. (*Journ. I.E.E.*, April 1940, Vol. 86, No. 520, pp. 396–398.)

3043. DESIGN OF RADIO RECEIVING EQUIPMENT TO MEET SPECIAL REQUIREMENTS [such as Radio Compasses].—W. L. Webb. (*Proc. Inst. Rad. Eng.*, March 1940, Vol. 28, No. 4, pp. 145–146: summary only.) From the Bendix Radio Corporation.

3044. CONTRIBUTION OF RADIOELECTRICITY TO THE SAFETY OF AERIAL NAVIGATION: THE RADIO COMPASS [Survey, with Special Attention to the Busignies Compass (Soc. LMT) and Details of the RC5 Equipment: Stroboscopic Radiogoniometers: Santucci Compass (2808 of 1938): Technique of Employment of Radio Compass, and Comparison with Other Methods of Navigation: etc.].—J. Bouchard: Busignies. (*Rev. Gén. de l'Élec.*, 13th/20th April & 27th April/4th May 1940, Vol. 47, Nos. 15/16 & 17/18, pp. 269–277 & 304–313.) *See* also 549 of 1937 and 1447 of 1938: *also* 631 of February.

3045. RADIOELECTRICITY IN AERONAUTICS: PART II.—M. Laveran. (*Rev. Gén. de l'Élec.*, 16th/23rd March 1940, Vol. 47, No. 11/12, pp. 194–201.) *See* 1895 of May.

3046. "AIRCRAFT RADIO AND ELECTRICAL EQUIPMENT" [Book Review].—Morgan. (*Proc. Inst. Rad. Eng.*, March 1940, Vol. 28, No. 3, p. 151.)

3047. A REFINEMENT OF THE HALF-CONVERGENCY CORRECTION [in Change from Rhumb-Line to Great-Circle Bearings: Formulae taking into account Terms involving Cube of Distance, satisfactory up to 3000 miles].—W. G. Baker. (*A.W.A. Tech. Review*, No. 4, Vol. 4, 1939, pp. 155–164.)

ACOUSTICS AND AUDIO-FREQUENCIES

3048. "LEITFADEN ZUR BERECHNUNG VON SCHALLVORGÄNGEN" [Theory, for the Practical Physicist, of Sound Fields of Sound Radiators: Book Review].—H. Stenzel. (*Hochf. tech. u. Elek:akus.*, March 1940, Vol. 55, No. 3, p. 104.)

3049. THE INSTABILITY OF LINEAR AND NON-LINEAR OSCILLATIONS ("MITNAHME"—PULL-IN—OSCILLATIONS).—W. Wenke. (*Hochf:tech. u. Elek:akus.*, April 1940, Vol. 55, No. 4, pp. 109–120.) Concluded from 2626 of July.

3050. THE DESIGN OF A LOUDSPEAKER [for Home Use: Criteria of Performance: Design for Mass Production, "as Near to Perfection as is Economically Possible": Adoption of Closed Casing: the Specification, & Some Results with Samples: with Discussion].—West & McMillan. (*Journ. I.E.E.*, May 1940, Vol. 86, No. 521, pp. 432–452.) From the P.O. Engineering Dept. A summary was referred to in 1036 of March.

3051. THE RELATIONSHIP BETWEEN THE POWER-OUTPUT STAGE AND THE LOUDSPEAKER.—F. Langford Smith. (*A.W.A. Tech. Review*, No. 4, Vol. 4, 1939, pp. 199–223.) The full paper, a long *Wireless World* article on which was dealt with in 1497 of 1939.

3052. PROPERTIES OF ROCHELLE SALT [Theories giving Qualitative Explanation of Anomalous Properties: Polymorphic Transition at Upper Curve Point is Spontaneous Elastic Deformation: New Interaction Theory ascribing Anomalies to Accidental Degeneration of Piezoelectric Interaction between Elastic Deformation and Electric Polarisation], *and* INFLUENCE OF ELECTROSTATIC FIELDS ON THE ELASTIC PROPERTIES OF ROCHELLE SALT.—H. Mueller. (*Phys. Review*, 1st May 1940, Ser. 2, Vol. 57, No. 9, pp. 829–839: pp. 842–843.)

3053. GOODMANS INFINITE-BAFFLE LOUDSPEAKER.—(*Wireless World*, June 1940, Vol. 46, No. 8, pp. 292–293.)

3054. THE CONNECTION OF SEVERAL LOUDSPEAKERS TO THE RECEIVER.—Wünsch. (*See* 3004.)

3055. EFFECTS OF HUM-BUCKING CONSTRUCTION AND MAGNETIC SHIELDING IN A.F. TRANSFORMERS.—Fortune. (*See* 3006.)

3056. MUSIC IN THREE DIMENSIONS [Stereophonic Reproduction at Carnegie Hall: Electrical "Enhancement" of Orchestral Records].—Watson Davis. (*Sci. News Letter*, 11th May 1940, Vol. 37, No. 19, pp. 294–295.) *See* also 3057, below.

3057. STEREOPHONIC RECORDING OF ENHANCED MUSIC, *and* STEREOPHONIC REPRODUCTION FROM FILM.—Anon: H. Fletcher. (*Bell Lab. Record*, May 1940, Vol. 18, No. 9, pp. 258–259: pp. 260–265 and 277.) *See* also 3056 & 3058.

www.americanradiohistory.com

2058. AUDITION DEMONSTRATION [of Auditory Perspective (Stereophonic System) and Magnetic-Tape Recording, at New York World's Fair].—R. A. Cushman. (*Bell Lab. Record*, May 1940, Vol. 18, No. 9, pp. 273–277.) *See* also 3057.

3059. HIGH-FIDELITY PUBLIC ADDRESS AND TRANSLATING SYSTEM [at Inter-American Congress for the Consolidation of Peace, and Other Conferences].—S. D. Wilburn & S. C. Tenac. (*Elec. Communication*, April 1940, Vol. 18, No. 4, pp. 266–271.)

3060. CALIBRATION OF MICROPHONE AND LOUDSPEAKER RESPONSE BY INTERRUPTED SOUND WAVES [with Advantages over Usual Continuous-Sound-Wave Methods in the Elimination of Reflection Effects and Disturbance by Noise].—T. Hayashi. (*Nippon Elec. Comm. Eng.*, Jan. 1940, No. 19, pp. 165–168.)

3061. CORRESPONDENCE ON "TELEPHONY IN NOISY SURROUNDINGS AND TESTS ON LARYNGOPHONES" [calling Attention to Recently Developed Italian Laryngophones of Magnetic Type (Less Noisy than Carbon Type and Less Fragile than Crystal): Comparative Merits of Laryngophone & Microphone: SAFAR Measuring Methods: etc.].—M. Federici: Ferrari-Toniolo. (*Alta Frequenza*, April 1940, Vol. 9, No. 4, pp. 237–240.) *See* 1897 of May.

3062. ON THE QUESTION OF DETERMINING THE EFFICIENCY OF [Electro-Magnetic] RESONANCE TELEPHONES.—H. Mrass. (*Ann. der Physik*, Ser. 5, No. 4, Vol. 37, 1940, pp. 291–302.)

The method described showed that the efficiency remained constant over the whole range of telephone currents from about 10^{-6}A down to those at the threshold of audibility (diaphragm movement 10^{-8}–10^{-10} cm—less than an atom diameter).

3063. NEW PICK-UPS: TWO MOVING-COILS [Jones "Coil" and Voigt Narrow-Loop] AND A CRYSTAL [Cosmocord Series III].—(*Wireless World*, June 1940, Vol. 46, No. 8, pp. 301–302.)

3064. A HEARING AID FOR RESEARCH AND GROUP USE [Gains of 3 Separate Frequency Bands are Variable].—E. W. Marchant & T. H. Turney. (*Journ. of Scient. Instr.*, June 1940, Vol. 17, No. 6, pp. 149–155.)

3065. CHOOSING A HEARING AID: APPROPRIATE MEASURES FOR DIFFERENT TYPES OF DEAFNESS.—T. S. Littler. (*Wireless World*, June 1940, Vol. 46, No. 8, pp. 283–286.)

3066. REVERBERATION AND ACOUSTICS IN THE CASE OF PRISMATIC POLYHEDRONS.—G. Chigrinski. (*Journ. of Tech. Phys.* [in Russian], No. 23, Vol. 9, 1939, pp. 2120–2138.) For previous work *see* 2627 of July.

3067. ON THE NECESSARY SOUND-ABSORPTION UNITS IN CINEMAS, AND THE REVERBERATION TIMES OF THE LATTER.—K. Weisse. (*Funktech. Monatshefte*, March 1940, No. 3, pp. 33–40.)

It is concluded that the necessary additional number of absorption units can be calculated accurately, for an auditorium of normal construction, merely from the air space and the air space per seat; the architectonic form plays an unimportant part.

3068. DENSITY OF ENERGY IN ACOUSTIC PROBLEMS [considered as Parameter to be dealt with by Itself: Simplification of Certain Problems in Architectural Acoustics: etc.].—G. Sacerdote. (*Sci. Abstracts*, Sec. A, 25th May 1940, Vol. 43, No. 509, pp. 416–417.)

3069. ELECTRO-ACOUSTIC REACTIONS, WITH SPECIAL REFERENCE TO QUARTZ-CRYSTAL VIBRATORS.—Starr. (*See* 2931.)

3070. MINIATURE ELECTRICALLY MAINTAINED TUNING FORK [as Resonant Filter Unit or Frequency Standard].—Muirhead & Company. (*Journ. of Scient. Instr.*, May 1940, Vol. 17, No. 5, p. 134.)

3071. SQUARE WAVES [and the Response of Networks: Method Too Sensitive for testing Acoustic and Electro-Mechanical Systems, Satisfactory for Electrical Systems: etc.].—L. B. Arguimbau. (*Proc. Inst. Rad. Eng.*, March 1940, Vol. 28, No. 3, p. 146: summary only.)

3072. THE GENESIS OF ABSOLUTE PITCH [Factors are Inheritance, Attention, & Experience].—A. Bachem. (*Journ. Acous. Soc. Am.*, April 1940, Vol. 11, No. 4, pp. 434–439.)

3073. A NOTE ON JUST INTONATION [and the Theoretician's Misinterpretation of Helmholtz].—Ll. S. Lloyd. (*Journ. Acous. Soc. Am.*, April 1940, Vol. 11, No. 4, pp. 440–445.)

3074. ELECTRONIC MUSICAL INSTRUMENTS AND THE DEVELOPMENT OF THE PIPELESS ORGAN.—Winch & Midgley. (*Journ. I.E.E.*, June 1940, Vol. 86, No. 522, pp. 517–541: Discussion pp. 541–547.) A summary was referred to in 1457 of April.

3075. DESIGN FOR AN ELECTRONIC REED ORGAN.—F. D. Merrill, Jr. (*Electronics*, April 1940, Vol. 13, No. 4, pp. 42–45 and 97, 98.)

3076. NEW ELECTRICAL REPRODUCERS APPLICABLE IN THE FIELD OF ELECTROACOUSTICS AND FOR THE BROADCASTING OF MUSIC WITHOUT PICK-UP BY MICROPHONE [Use of the "Electrodynamic Bridge" for Stringed Instruments, etc.].—G. Giulietti. (*L'Elettrotec.*, 10th May 1940, Vol. 27, No. 9, pp. 217–218.) *See* also 2105 of May and 2293 of June.

3077. SMALL ELECTRICAL "THUNDER SCREEN" PRODUCES ALL VARIETIES OF CRASHES EXCEPT HIGH-PITCHED ONES.—Burris-Meyer. (*Sci. News Letter*, 11th May 1940, Vol. 37, No. 19, p. 299.)

3078. A NEW APPARATUS FOR THE REPRESENTATION AND INVESTIGATION OF PROGRESSIVE WAVES ALONG A FLEXIBLE CARRIER.—Bruns. (*See* 2910.)

www.americanradiohistory.com

3079. THE CALCULATION OF CROSS MODULATION IN A MULTI-CHANNEL TRANSMISSION WITH A LARGE NUMBER OF CHANNELS.—Lubny-Gertsyk. (*See* 2945.)

3080. THE OPERATION AND UTILISATION OF ECHO-SUPPRESSORS [in Telephone Circuits: Survey].—R. E. Jones. (*P.O. Elec. Eng. Journ.*, Jan. 1940, Vol. 32, Part 4, pp. 247–255.)

3081. THE APPROXIMATE CALCULATION OF THE ELECTRIC FIELD AND THE CAPACITIES FOR SOME SIMPLE FORMS OF TELEPHONE CABLE [Two-Wire and Spiral Quad, with and without Cylindrical Shielding].—H. Meinke. (*E.N.T.*, Feb. 1940, Vol. 17, No. 2, pp. 42–49.)

3082. RADIO PROGRESS DURING 1939: PART I—ELECTROACOUSTICS [with 56 Literature References, chiefly American].—(*Proc. Inst. Rad. Eng.*, March 1940, Vol. 28, No. 3, pp. 99–102.)

3083. "SCHALTSCHEMATA UND DIFFERENTIALGLEICHUNGEN ELEKTRISCHER UND MECHANISCHER SCHWINGUNGSGEBILDE" [Vibrating Systems: Book Review].—H. Hecht. (*Hochf:tech. u. Elek:akus.*, April 1940, Vol. 55, No. 4, p. 136.) By "one of the pioneers of the practical application of electro-acoustics in Germany."

3084. RELAXATION METHODS APPLIED TO ENGINEERING PROBLEMS: V & VI.—Gandy, Pellew, Southwell. (*See* 3246.)

3085. A PHENOMENOLOGICAL THEORY OF THE MECHANICAL PROPERTIES OF AMORPHOUS BODIES [including a Volume Velocity (to explain Abnormally Large Absorption of Supersonic Waves in Liquids) & Other Modifications of Maxwell's Relaxation Theory].—Frenkel & Obrastzov. (*Journ. of Phys.* [of USSR], No. 2, Vol. 2, 1940, pp. 131–142: in English.) *Cf.* Issakovich, 929 of March.

3086. "DER ULTRASCHALL UND SEINE ANWENDUNG IN WISSENSCHAFT UND TECHNIK" [Second, Revised, & Extended Edition: Book Review].—L. Bergmann. (*Naturwiss.*, 23rd Feb. 1940, Vol. 28, No. 8, p. 128.) An English translation of the first edition was referred to in 634 of 1939.

PHOTOTELEGRAPHY AND TELEVISION

3087. TELEVISION RELAYED [from Empire State Building *via* Happauge and Rocky Point to Riverhead Terminal, using Micro-Waves and Frequency Modulation].—A. P. Peck. (*Scient. American*, May 1940, Vol. 162, No. 5, p. 282.)

For Warner's report on triple relay experiment with frequency modulation *see* 1243 of March; for the G. E. Helderberg relay station see *Gen. Elec. Review*, April 1940, Vol. 43, No. 4, pp. 149–150 and 181.

3088. PAPERS ON IGNITION INTERFERENCE ON ULTRA-SHORT WAVES.—Scholz & Faust, & others. (*See* 2980/2982.)

3089. A NEW ICONOSCOPE FOR AMATEUR TELEVISION CAMERAS [Economical 2-Inch Electrostatic-Deflection Tube].—J. J. Lamb: R.C.A. (*QST*, June 1940, Vol. 24, No. 6, pp. 13–15 and 96, 98.) *See* also 3090, below.

3090. A NEW ELECTRONIC TELEVISION TRANSMITTING SYSTEM FOR THE AMATEUR [taking Advantage of a New Type of Miniature Iconoscope].—J. B. Sherman. (*QST*, May 1940, Vol. 24, No. 5, pp. 30–36.) *See* 3089, above, and *Sci. News Letter*, 22nd June 1940, p. 391.

3091. A RECEIVER FOR THE NEW AMATEUR TELEVISION SYSTEM [using a 3-Inch Kinescope].—J. B. Sherman. (*QST*, June 1940, Vol. 24, No. 6, pp. 38–43.) *See* 3090 above.

3092. NEW TYPE OF D.C./A.C. VIBRATOR INVERTER [Applications include Television Receivers in D.C. Districts, etc.].—Kiltie. (*See* 3005.)

3093. TELEVISION AND THE EXPORT MARKET [during the War: Editorial].—(*Electrician*, 31st May 1940, Vol. 124, p. 387.)

3094. TELEVISION [including Review of Recent Progress & Present Position].—W. E. Tremain. (*Journ. I.E.E.*, May 1940, Vol. 86, No. 521, pp. 460–470.) Chairman's address to Argentine Centre.

3095. RADIO PROGRESS DURING 1939: PART II—ELECTRONICS [Cathode-Ray & Television Tubes, U.H.F. & Other Valves, Photo-electric Devices, etc: with 114 Literature References, chiefly American & German].—(*Proc. Inst. Rad. Eng.*, March 1940, Vol. 28, No. 3, pp. 103–108.)

3096. RADIO PROGRESS DURING 1939: PART VI & VII—TELEVISION & FACSIMILE [with 96 Literature References, chiefly American & German].—(*Proc. Inst. Rad. Eng.*, March 1940, Vol. 28, No. 3, pp. 120–125.)

3097. THE ESSENTIAL CHARACTERISTICS OF TELEVISION CIRCUITS [Effective Frequency Band-Width Necessary: Desirable Limits of Attenuation & Phase Delay (Published Data of Practical Circuits: Experimental Determination): Interfering Effect of Random & Single-Frequency Noise: Suggested Values for Over-All Gain Stability: Non-Linear Distortion].—R. F. J. Jarvis & E. C. H. Seaman. (*P.O. Elec. Eng. Journ.*, Jan. 1940, Vol. 32, Part 4, pp. 224–236.)

3098. IMPULSE GENERATION [with Particular Reference to the German Television Standards: Discussion of Mechanical & Electrical Methods and Their Difficulties, leading to the "Auxiliary Signal" System and Its Advantages].—J. Schunack. (*Funktech. Monatshefte*, March 1940, No. 3, Supp. pp. 9–12.) Containing little, if anything, not already covered by the paper dealt with in 222 of January.

www.americanradiohistory.com

3099. THE GRADATION OF TELEVISION PICTURES [Max. Contrast perceptible by Eye, between Parts of Same Picture, about 80 : 1 : Available Contrast Range in Good Modern Tubes about 25 : 1 (Points 1 Inch Apart), seriously reduced by Stray Light, Poor Electron-Gun, etc : Advantages of Suggested Linear Over-All Characteristic, made up from Logarithmic Transmitter Characteristic & Exponential Receiver Characteristic].—H. E. Kallmann. (*Proc. Inst. Rad. Eng.*, April 1940, Vol. 28, No. 4, pp. 170–174.) From the E.M.I. laboratories.

3100. OBSERVATIONS ON THE DARK CURRENT OF A WILLEMITE CRYSTAL [Effect connected with Johnson's "Emission of Trapped Light" ?].—R. C. Herman & R. Hofstadter. (*Phys. Review*, 15th May 1940, Ser. 2, Vol. 57, No. 10, p. 936.) *See* Johnson, 287 of January.

3101. THEORY OF THE MAGNETITE LIGHT SHUTTER [based on Ellipsoidal Shape of Magnetic Entities responsible for Effect].—W. C. Elmore : Heaps. (*Phys. Review*, 1st May 1940, Ser. 2, Vol. 57, No. 9, p. 842.) *See* 2326 of June (*also* 1949 of May). Elmore finds that the assumption of ellipsoidal particles in place of the cylindrical ones there assumed enables Heaps's simple theory to be retained.

3102. THE OPTICAL CONSTANTS OF THICK METAL FILMS [Ag, Au, & Cu] IN THE VISIBLE AND NEAR INFRA-RED.—R. Kretzmann. (*Ann. der Physik*, Ser. 5. No. 4, Vol. 37, 1940, pp. 303–325.)

3103. ON THE ENERGY DISTRIBUTION OF PHOTOELECTRONS.—Kushnir, Vainrib, & Goncharov. (*Journ. of Tech. Phys.* [in Russian], No. 23, Vol. 9, 1939, pp. 2139–2146.)

An experimental investigation of the energy distribution of photoelectrons emitted from composite surfaces of the types Ag-Cs_2O-Cs-Ag-Cs and Ag-Cs_2O-Ag-Cs. The electro-optical method used (Fig. 1) is described and a number of experimental curves are shown. The results are discussed, and the conclusions reached are : (1) the longer the wavelength of the light falling on the cathode, the later will photoelectron-current saturation occur, and (2) the shape of the curve showing the energy distribution of the electrons depends on the wavelength, but no simple statement can be made because the emission of electrons from a composite surface is interfered with by a local electric field.

3104. ON THE PHOTOELECTRIC EFFECT FROM THE PHOTOELECTRICALLY SENSITISED ACTIVE CATHODES [Theory agreeing with Measurements by de Boer & others, for Monatomic Alkali Layer adsorbed on Semiconductor].—A. Ryzhanov. (*Physik. Berichte*, No. 3, Vol. 21, 1940, pp. 348–349.)

3105. PHOTOVOLTAIC CELLS WITH Ag-AgBr ELECTRODES : PART III—OPTICAL SENSITISING BY DYES.—Sheppard & others. (*Sci. Abstracts*, Sec. A, 25th May 1940, Vol. 43, No. 509, p. 433.)

3106. ELECTRIC AND PHOTOELECTRIC PROPERTIES OF VERY THIN LAYERS OF POTASSIUM ON GLASS [Results showing Identity of Photoelectrons and Conduction Electrons in Such Layers].—G. Maciuc. (*Sci. Abstracts*, Sec. A, 25th April 1940, Vol. 43, No. 508, pp. 343–344.)

3107. THE PHOTOELECTRIC AND OPTICAL PROPERTIES OF SODIUM AND BARIUM [Experimental Spectral Distribution Curves using Polarised and Unpolarised Radiation : Work Functions : Comparison with Mitchell's Theory].—R. J. Maurer. (*Phys. Review*, 1st April 1940, Ser. 2, Vol. 57, No. 7, pp. 653–658.)

For this theory *see* Mitchell, 2313 of 1936. "The theory fails satisfactorily to account for the absolute photoelectric yields and for the ratio of the photoelectric yields obtained with radiation polarised parallel and perpendicular to the plane of incidence."

3108. AN ELECTRON-DIFFRACTION STUDY OF THE SURFACES OF ALKALI AND ALKALINE-EARTH METALS EXPOSED TO AIR.—S. Yamaguchi. (*Nature*, 11th May 1940, Vol. 145, p. 742.)

3109. "DIE PHOTOZELLE IN DER TECHNIK" [Third, Enlarged Edition : Book Review].—Geffcken & Richter. (*E.T.Z.*, 4th April 1940, Vol. 61, No. 14, p. 336.)

MEASUREMENTS AND STANDARDS

3110. AN ULTRA-HIGH-FREQUENCY VOLTMETER [Combination of Current-Indicating Instrument and Closed Quarter-Wave Line gives Accurate Voltmeter for Large Frequency Range : Use for measuring Transmitted Power].—A. Alford & S. Pickles. (*Proc. Inst. Rad. Eng.*, March 1940, Vol. 28, No. 3, pp. 144–145 : summary only.)

3111. A NEW METHOD OF MEASURING HIGH RESISTANCES AT RADIO FREQUENCIES [and Its Failure at Very High Frequencies where Apparent Impedance can be represented by Reduced Resistance in parallel with Condenser].—G.W.O.H : Honnell. (*Wireless Engineer*, June 1940, Vol. 17, No. 201, pp. 245–247.) Editorial describing and criticising Honnell's method (2368 of June).

3112. A THERMIONIC MILLIAMMETER FOR RADIO-FREQUENCY CURRENTS [passed through Valve Filament and measured by Emission].—J. C. Mouzon. (*Phys. Review*, 15th May 1940, Ser. 2, Vol. 57, No. 10, p. 943 : short summary.) *Cf.*, for example, Abstracts, 1930, p. 461 (Martyn) ; 1932, p. 416, and 274 of 1936 (Barlow).

3113. APPARATUS FOR MEASURING THE IMPEDANCE OF BROADCASTING [Rediffusion] FEEDERS.—Meerovich & others. (*See* 3211.)

3114. THE ABSOLUTE CALIBRATION OF SPHERE SPARK GAPS WITH THE CATHODE-RAY OSCILLOGRAPH AS NULL INSTRUMENT [Errors of a C-R-O as a Measuring Instrument, and Their Reduction].—K. Berger & B. C. Robinson. (*Bull. Assoc. suisse des Élec.*, No. 7, Vol. 31, 1940, pp. 157–162 : in German.)

The errors referred to are those due to variation

www.americanradiohistory.com

of ray voltage (and consequently of sensitivity), to lens errors of the electron-optical deflecting system, and to the thickness of the trace. All three can be reduced by at least one order of magnitude by the compensating circuit of Fig. 1, in which the c-r-o is employed at its highest possible sensitivity as a null indicator, the actual surge-voltage measurement being accomplished by a precision d.c. voltmeter. For another paper on the c-r-o as a measuring instrument *see* von Borries & Ruska, 2684 of July.

3115. SQUARE-WAVE GENERATOR [Adjustable Ratio and Repetition-Frequency (1–7000 c/s): Relaxation Oscillator controlled by Gas-Discharge Triode].—Cossor Company. (*Journ. of Scient. Instr.*, June 1940, Vol. 17, No. 6, pp. 166–167.)

3116. SQUARE-WAVE GENERATOR [for determining Frequency Response of Amplifiers and Other Networks: Measurement of L.F. Response of Television Systems].—General Radio. (*Journ. of Applied Phys.*, May 1940, Vol. 11, No. 5, p. viii.) *See* also 2369 of June.

3117. THE TESTING OF COILS FOR SHORT-CIRCUITED TURNS [by Comparison of Inductances & Resistances of Two Coils: by Observation of Magnetic Field of Coil: by Measurement of Power Absorbed by Short-Circuited Turns].—M. I. Vitenberg. (*Elektrosvyaz*, No. 6, 1939, pp. 148–151: Russian only). The second method is unsuitable for iron-cored coils, and does not indicate the number of short-circuited turns.

3118. SOME APPLICATIONS OF THÉVÉNIN'S THEOREM [New Method of Measuring the Leakage Resistance of Earthing Conductors].—B. Ya. Sobolev. (*Elektrosvyaz*, No. 6, 1939, pp. 121–123: Russian only.)

3119. NOTE ON A D.C. AMPLIFYING MICROAMMETER [for Ionisation-Gauge & Beam Currents, etc.].—Langer & Curie. (*Review Scient. Instr.*, May 1940, Vol. 11, No. 5, pp. 181–182.) Improved version of Roberts's arrangement, 3697 of 1939.

3120. THE ELECTRICAL STABILITY OF TUBULAR INDUCTANCE COILS WITH DEPOSITED CONDUCTORS [Tests on Three Ribbon-Section Coils with Different Turn Spacings: Low Temperature Coefficient of Inductance requires Large Turn Spacing and also Very Small Radial Depth].—H. A. Thomas. (*Journ. I.E.E.*, May 1940, Vol. 86, No. 521, pp. 471–472.) Arising out of the work dealt with in 1636 of 1939 and back reference.

3121. VARIABLE AIR CONDENSERS: DETERMINATION OF THEIR RESIDUAL PARAMETERS [by Method requiring only Standard Apparatus and Two Fixed Condensers with Unknown Residual Parameters].—R. F. Proctor. (*Wireless Engineer*, June 1940, Vol. 17, No. 201, pp. 257–262.) From the General Electric laboratories.

3122. FREQUENCY-METERING RECEIVERS.—Latmiral. (*See* 2991.)

3123. ELECTRO-ACOUSTIC REACTIONS, WITH SPECIAL REFERENCE TO QUARTZ-CRYSTAL VIBRATORS [and Advantages of Partial Plating].—Starr. (*See* 2931.)

3124. EXTENDED VARIABLE FREQUENCY CRYSTAL CONTROL.—Goodman: Hayes. (*See* 2966.)

3125. A NOTE ON THE DETERMINATION OF THE EQUIVALENT ELECTRICAL CONSTANTS OF A QUARTZ-CRYSTAL RESONATOR [Equivalent Series Capacitance accurately measured without High Degree of Accuracy in measuring Small Capacitances or Frequency Differences, from Reactance/Frequency Curve of Resonator connected across Highly Oscillatory Circuit].—G. Builder. (*A.W.A. Tech. Review*, No. 1, Vol. 5, 1940, pp. 41–45.)

3126. A NEW METHOD FOR THE DETERMINATION OF THE AXES OF QUARTZ CRYSTALS BY MEANS OF ETCH FIGURES, *and* THE USE OF AN ETCHED SPHERE OF QUARTZ IN IDENTIFYING THE ORIENTATION OF QUARTZ PLATES.—W. G. Cady: K. S. Van Dyke. (*Proc. Inst. Rad. Eng.*, March 1940, Vol. 28, No. 3, p. 144: p. 144: summaries only.)

3127. QUARTZ CRYSTALS: THEIR PIEZOELECTRIC PROPERTIES AND USE IN CONTROL OF HIGH FREQUENCY: PART I—HISTORY, THEORY, APPLICATIONS, AND PERFORMANCE.—C. F. Baldwin. (*Gen. Elec. Review*, May 1940, Vol. 43, No. 5, pp. 188–194.)

3128. PROPERTIES OF ROCHELLE SALT, *and* INFLUENCE OF ELECTROSTATIC FIELDS ON THE ELASTIC PROPERTIES OF ROCHELLE SALT.—Mueller. (*See* 3052.)

3129. STANDARD-FREQUENCY TRANSMISSIONS OF THE P.T.R. BY THE DEUTSCHLANDSENDER, AT 10.50 A.M. ON WEEK-DAYS [Daily Deviations, Nov. 1939/March 1940].—Scheibe, Adelsberger. (*Physik. Zeitschr.*, 1st April 1940, Vol. 41, No. 7, p. 156: *Hochf:tech. u. Elek:akus.*, April 1940, Vol. 55, No. 4, p. 132.)

"The numbers in columns 2–5 give by how much, in 10^{-9} of the value, the transmitted frequency departs from the nominal value of 1000.000 000 c/s." They range from 0 to 46, with about 30 "blanks" when the transmissions did not occur. *See* also 3277 of 1939.

3130. GOLD-CHROMIUM RESISTANCE ALLOY [for Resistance Standards: Effect of Moisture Content of Surrounding Air: Immersion in Argon in Brass Container].—Schulze. (*Arch. f. Tech. Messen*, March 1940, No. 105, dble p. T36.) For a long paper *see* 2685 of July.

3131. THE INFLUENCE OF A MAGNETIC FIELD ON THE ELECTRICAL CONDUCTIVITY OF BISMUTH SINGLE CRYSTALS AT LOW TEMPERATURES.—Davydov & Pomeranchuk. (*Journ. of Phys.* [of USSR], No. 2, Vol. 2, 1940, pp. 147–160: in English.)

www.americanradiohistory.com

3132. NEW TECHNICAL MEASURING EQUIPMENT FOR TESTING INSULATING MATERIALS [Hand-Operated or Automatic].—H. Poleck. (*E.T.Z.*, 25th April 1940, Vol. 61, No. 17, pp. 369–373.)

"A complete capacitance and loss-angle measuring equipment is described, consisting of a [50 c/s] bridge with auxiliary units such as a sensitivity-amplifier, an adaptor for earthed test specimens, overload protection, and a recording instrument."

3133. DIELECTRIC CONSTANT OF DIAMOND [Two Methods of Measurement, and Results].—L. G. Groves & A. E. Martin. (*Sci. Abstracts*, Sec. A, 25th May 1940, Vol 43, No. 509, pp. 421–422.)

3134. HIGH-FREQUENCY REAL-POWER METER [5–100 kc/s (extendable to 3–500 kc/s): comprising Wattmeter (Thermo-Converters in Bridge Circuit) and Thermo-Converter Voltmeter & Ammeter for Preliminary Measurement & Phase-Angle Determination].—Siemens & Halske. (*Arch. f. Tech. Messen*, March 1940, No. 105, p. F2.)

3135. THE GRAPHITE/SILICON-CARBIDE THERMOCOUPLE: ITS APPLICATIONS IN METALLURGY [and Ceramic & Other Industries].—M. Bonnot. (*Sci. Abstracts*, Sec. B, 25th May 1940, Vol. 43, No. 509, pp. 222–223.)

3136. THE DRY-PLATE RECTIFIER IN ELECTRICAL MEASURING TECHNIQUE [Survey, including Temperature Effect & Frequency Dependence of Rectifier-Type Meters: Special Types—Form-Factor, Power, and Amplifier-Output Meters].—H. F. Grave. (*Zeitschr. f. Instrumentenkunde*, March 1940, Vol 60, No. 3, pp. 74–87.)

3137. SURVEY OF OPTICAL DEVICES USED IN METERS AND MEASURING INSTRUMENTS.—F. E. J. Ockenden. (*Journ. I.E.E.*, May 1940, Vol. 86, No. 521, pp. 453–459.)

3138. PORTABLE MULTI-REFLECTION GALVANOMETER [using the Mathews Optical-Lever System].—Pye & Company. (*Journ. of Scient. Instr.*, May 1940, Vol. 17, No. 5, pp. 125–126.) *See* 3298 of 1939.

3139. ON THE DIRECT AND [Greatly Superior] SEMI-DIRECT DETERMINATION OF THE CRITICAL RESISTANCE OF MOVING-COIL GALVANOMETERS.—S. Gerszonowicz. (*Rev. Gén. de l'Élec.*, 13th/20th April 1940, Vol. 47, No. 15/16, pp. 287–294.)

3140. ON THE DECOUPLING OF TWO MEASURING CIRCUITS [Prevention of Interaction between Meters on Same Voltage Transformer].—H. Poleck. (*Sci. Abstracts*, Sec. B, 25th April 1940, Vol. 43, No. 508, p. 168.)

3141. REMARKS ON ZINKE'S PAPER "FREQUENCY-INDEPENDENT CAPACITIVE-OHMIC VOLTAGE DIVIDERS FOR MEASURING PURPOSES."—J. Krutsch: Zinke. (*E.T.Z.*, 18th April 1940, Vol. 61, No. 16, pp. 365–366.) *See* 4626 of 1939.

3142. REMARKS ON MOERDER'S PAPER "MEASUREMENT OF THE HARMONIC CONTENT OF ALTERNATING VOLTAGES."—H. Klewe: Moerder. (*E.T.Z.*, 18th April 1940, Vol. 61, No. 16, pp. 366–367.) *See* 2373 of June.

3143. REVISION OF ELECTRICAL UNITS [and the Existing Position regarding the Change].—E. C. Crittenden. (*Elec. Engineering*, April 1940, Vol. 59, No. 4, pp. 160–163.)

SUBSIDIARY APPARATUS AND MATERIALS

3144. A NEW DESIGN OF ELECTROLYTIC TROUGH FOR THE DETERMINATION OF POTENTIAL FIELDS.—Himpan. (*See* 3032.)

3145. THE CATHODE-RAY OSCILLOGRAPH AS NULL INSTRUMENT [Errors of a C-R-O as a Measuring Instrument, and Their Reduction].—Berger & Robinson. (*See* 3114.)

3146. CATHODE-RAY OSCILLOGRAPHS [particularly the 9-Inch Model 3379].—Cossor Company. (*Journ. of Scient. Instr.*, May 1940, Vol. 17, No. 5, pp. 129–131.)

3147. ARRANGEMENT FOR THE CIRCULAR SWEEPING OF A RADIAL DEFLECTION APPLICABLE TO CATHODE-RAY TUBES WITH DISSYMMETRICAL MOUNTING OF THEIR PLATES, *and* INVERSE SWEEPING IN HIGH-SPEED CATHODE-RAY OSCILLOGRAPHS [Spot kept well off Screen during Waiting Period].—Vichnievsky: Bradfer. (*Sci. Abstracts*, Sec. B, 25th May 1940, Vol. 43, No. 509, p. 220: p. 220.) For Vichnievsky's arrangement *see* also *Comptes Rendus*, 5th Feb. 1940, Vol. 210, No. 6, pp. 213–214.

3148. THE SYNCHRONISATION OF A SIMPLE RELAXATION OSCILLATOR.—Builder & Roberts. (*See* 2926.)

3149. THE CAPILLARY MERCURY LAMP AS AN OSCILLOGRAPH LIGHT SOURCE [giving Bromide-Paper Recording Speeds up to 50 ft per Second].—Skilling. (*Elec. Engineering*, April 1940, Vol. 59, No. 4, pp. 157–159.)

3150. THE DEVELOPMENT OF WATER-COOLED QUARTZ MERCURY LAMPS [with Application to Television Studio Lighting].—Noel. (*Journ. of Applied Phys.*, May 1940, Vol. 11, No. 5, pp. 325–326.)

3151. UNIQUE OSCILLOGRAPHIC DEMONSTRATIONS [Mirror-Galvanometer/Phosphorescent-Screen Oscillograph for Biophysical & Other Phenomena].—Hoecker & Asher. (*Sci. Abstracts*, Sec. A, 25th May 1940, Vol. 43, No. 509, p. 426.) *See* also 3048 of 1938.

3152. A [Crystal] RECORDER FOR ELECTRICAL POTENTIALS. THE DAMPING OF PIEZO-ELECTRIC SYSTEMS.—Offner. (*Journ. of Applied Phys.*, May 1940, Vol. 11, No. 5, pp. 347–352.) Theory and improvements in design of instrument referred to in 387 of 1937 (where "Bimorph" has a printer's error).

www.americanradiohistory.com

3153. RESULTS WITH A NEW ELECTRON SUPER-MICROSCOPE EQUIPMENT [with Numerous Photographic Records], *and* STEREO-SUPER-MICROSCOPY WITH THE UNIVERSAL ELECTRON MICROSCOPE [Use of Double Objectives: Variation of Inclination of Object to Direction of Electron Beam: Illustrative Stereo-Photographs].—von Ardenne. (*Naturwiss.*, 23rd Feb. 1940, Vol. 28, No. 8, pp. 113–127: 19th April, No. 16, pp. 248–252.)

For this "Universal" model *see* 2709 of July. Among the 20 literature references given in the first of the present papers there is one not already dealt with in these "Abstracts & References"; it is by von Ardenne himself (as are most of the others) and is on "The Wedge-Section Method, a Way of preparing Microtome Sections less than 10^{-3} mm Thick, for Electron-Microscopic Purposes" (*Z. wissenschaftl. Mikrosk.*, No. 1, Vol. 56, 1939, p. 8).

3154. STEREOSCOPIC PHOTOGRAPHS WITH THE ELECTROSTATIC SUPER-MICROSCOPE [Example].—Mahl. (*Naturwiss.*, 26th April 1940, Vol. 28, No. 17, p. 264.) For the instrument used *see* 1570 of April: for other stereoscopic photographs *see* von Ardenne, 3153, above. *See* also Mahl, 2102 of May.

3155. MEASUREMENTS OF IMAGE ERRORS IN AN [Electron-Optical] LENS ENCLOSED IN IRON WITH A VARIABLE AIR SLIT.—Becker & Wallraff. (*Arch. f. Elektrot.*, 15th April 1940, Vol. 34, No. 4, pp. 230–236.)

The errors for which experimental curves are here given are spherical aberration, curvature of the image field, astigmatism, and distortion. The errors are found to be smaller for small slit widths, to increase as the slit increases to a width between 10 and 15 mm, and thence to decrease again. The lens current required for a small slit is however very high, so that the magnetic field is compressed and the lens becomes difficult to adjust. The errors are found to be generally more than twice as large as those for lenses without iron. The variation with focal length found for lenses without iron is also valid for lenses enclosed in iron. With the latter, error terms of higher order must be taken into account than with the former. It is found that it is in general not advisable to choose iron-enclosed lenses of the type here investigated to form images of large surfaces. For previous work *see* 2712 & 2713 of July.

3156. LUMINESCENT MATERIALS: PART I—THEORY OF ZnS CRYSTAL PHOSPHORS.—Uehara. (*Sci. Abstracts*, Sec. A, 25th May 1940, Vol. 43, No. 509, p. 395.)

3157. APPARENT SPLITTING OF LIGHT FROM FLUORESCENT LAMPS INTO COMPONENT PARTS BY MOVING OBJECTS [Phenomenon leading to Hypothesis of Alternate Flashes of Light of Various Wavelengths].—Scull & others. (*Science*, 12th April 1940, Vol. 91, pp. 357–358). For an explanation by Fonda (*cf.* 3726 of 1939) see *ibid.*, 17th May, p. 476; *also* Thayer, 31st May, p. 524.

3158. EXPERIMENTS ON THE THERMOLUMINESCENCE OF SOME COMMON AND UNUSUAL MINERALS.—Northup & Lee. (*Journ. Opt. Soc. Am.*, May 1940, Vol. 30, No. 5, pp. 206–223.)

3159. "ERZEUGUNG VON ATOM- UND IONEN-STRAHLEN" [Book Review].—Bomke. (*Zeitschr. f. tech. Phys.*, No. 4, Vol. 21, 1940, p. 95.)

3160. THE DEPOSITION OF THIN METALLIC FILMS BY CATHODIC SPUTTERING [Avoidance of Discoloration].—Voss & Immelman. (*Journ. of Scient. Instr.*, May 1940, Vol. 17, No. 5, p. 116.)

3161. MORE ABOUT VACUUM LEAK TESTING [Change of Electron Emission in Ionisation Gauge when Leak is painted with Carbon Tetrachloride].—Lawton. (*Review Scient. Instr.*, April 1940, Vol. 11, No. 4, p. 134.) Prompted by the paper dealt with in 1179 of March.

3162. THE PHILIPS VACUUM GAUGE.—Edwards & Company. (*Journ. of Scient. Instr.*, May 1940, Vol. 17, No. 5, pp. 133–134.) On the principle dealt with in 4265 of 1937 (Penning).

3163. CLOSING THE COMPRESSION CAPILLARY OF A McLEOD GAUGE [Method avoiding Distortion].—Ferguson. (*Review Scient. Instr.*, April 1940, Vol. 11, No. 4, p. 134.)

3164. A SELF-SEATING VALVE [using Rustless-Steel Ball].—Marvell. (*Journ. of Scient. Instr.*, May 1940, Vol. 17, No. 5, pp. 115–116.)

3165. ADMISSION OF PURE GASES TO VACUUM SYSTEMS [by Diffusion: Richardson Equation Constants: a Hydrogen Palladium Leak].—Jossem. (*Review Scient. Instr.*, May 1940, Vol. 11, No. 5, pp. 164–166.)

3166. A METHOD FOR OPENING A TUBE IN A VACUUM.—Brady. (*Review Scient. Instr.*, May 1940, Vol. 11, No. 5, p. 181.)

3167. PAPERS ON HIGH-VOLTAGE ELECTROSTATIC GENERATORS, INCLUDING EXPERIMENTAL MODELS, FOR ATOMIC STRUCTURE INVESTIGATIONS.—Joffe, Hochberg, & others. (*Journ. of Tech. Phys.* [in Russian], No. 23, Vol. 9, 1939, pp. 2071 .. 2103.)

Theory, and survey of various types: experiments with small models in paraffin oil: 1600 kv from generator in tank 4 m high, 2.7 m diam: small models in which a number of parallel discs rotate between fixed discs: models operating in compressed gas.

3168. ON MEASUREMENTS ON A RESONANCE APPARATUS FOR THE GENERATION OF VERY HIGH ALTERNATING VOLTAGES.—Hausser: Hasselbeck & Dänzer. (*Ann. der Physik*, Ser. 5, No. 3, Vol. 37, 1940, pp. 249–260.) Examination of the factors limiting the voltages attainable by the method dealt with in 1240 of 1936.

3169. REVIVAL OF INTEREST IN THE BRASCH & LANGE HIGH-VOLTAGE IMPULSE TUBE.—Sheppard. (*Scient. American*, June 1940, Vol. 162, No. 6, pp. 342–343.) *See* Abstracts, 1930, p. 228, and 1931, p. 494.

www.americanradiohistory.com

3170. THE NATURAL OSCILLATIONS OF THE SINGLE-STAGE PULSE GENERATOR [Toepler's Circuit for Spark Investigations, recently used for Breakdown Tests on Insulators: C-R-O Investigation of Behaviour].—Lehmhaus. (*E.T.Z.*, 4th April 1940, Vol. 61, No. 14, pp. 323–325.)

3171. THE INFLUENCE OF DISCHARGE-CHAMBER STRUCTURE UPON THE INITIATING MECHANISM OF THE HIGH-FREQUENCY DISCHARGE [Three Breakdown Processes, sometimes operating Simultaneously].—Githens. (*Phys. Review*, 1st May 1940, Ser. 2, Vol. 57, No. 9, pp. 822–828.)

3172. THE RÔLE OF IONISATION BY POSITIVE IONS IN SPARK BREAKDOWN.—Varney & others. (*See* 2920.)

3173. ON THE RECOMBINATION IN THE NEGATIVE GLOW DISCHARGE [Measurements].—Fischer. (*Naturwiss.*, 23rd Feb. 1940, Vol. 28, No. 8, pp. 127–128.)

3174. THE EFFECT OF A MAGNETIC FORCE ON HIGH-FREQUENCY DISCHARGES IN PURE GASES.—Brown. (*Phil. Mag.*, March 1940, Ser. 7, Vol. 29, No. 194, pp. 302–309.) Experiments on nitrogen and helium similar to those on dry air referred to in 4157 of 1938 (Townsend & Gill).

3175. "FUNDAMENTAL PROCESSES OF ELECTRICAL DISCHARGE IN GASES" [Book Review].—Loeb. (*Review Scient. Instr.*, April 1940, Vol. 11, No. 4, p. 144.)

3176. MOLECULAR FILMS AS DIELECTRICS OF HIGH RESISTANCE TO BREAKDOWN [Films of Ba- and Cd-Stearate of Thickness 100–1000 AU: Heat Breakdown at Faulty Places], *and* ELECTRICAL RESISTANCE OF SINGLE CRYSTALS OF LONG-CHAIN FATTY ACIDS.—Thiessen, Beischer, & von Gillhaussen. (*Naturwiss.*, 26th April 1940, Vol. 28, No. 17, p. 265.)

3177. A SUBSTITUTE FOR MICA [Production of Alsifilm from Bentonite].—U.S. Bureau of Mines. (*Engineer*, 31st May 1940, Vol. 169, p. 495.) *See* also 2732 of July.

3178. THE DRYING PROCESS IN [Insulating] PAPER, AS DETERMINED BY ELECTRICAL METHODS.—Garton. (*Journ. I.E.E.*, April 1940, Vol. 86, No. 520, pp. 369–378.)

3179. VARIABLE AIR CONDENSERS: DETERMINATION OF THEIR RESIDUAL PARAMETERS.—Proctor. (*See* 3121.)

3180. CONDENSERS FOR CRYSTAL FILTERS.—Renne & Alekseev. (*See* 2933.)

3181. THE INDUSTRIAL UTILISATION OF THE ELECTROCHEMICAL CONDENSER [Characteristic Properties, leading to Necessary Precautions in Application].—André. (*Rev. Gén. de l'Élec.*, 30th March/6th April 1940, Vol. 47, No. 13/14, pp. 219–223.)

3182. THE TESTING OF COILS FOR SHORT-CIRCUITED TURNS.—Vitenberg. (*See* 3117.)

3183. NEW TYPE OF D.C./A.C. VIBRATOR INVERTER [Circuit for Zero Current at "Break"].—Kiltie. (*See* 3005.)

3184. A MATERIAL HAVING A NEGATIVE RESISTANCE/CURRENT CHARACTERISTIC ["Metrosil," and Its Use in Lightning Arresters, for Overload Protection of Instruments, Voltmeter Shunt (giving Contracted Scale at Higher Readings), Constant-Voltage Valve Circuits, etc.].—Metropolitan-Vickers. (*Journ. of Scient. Instr.*, June 1940, Vol. 17, No. 6, p. 166.)

3185. ELECTRICAL CONTACTS FROM POWDERED METALS ["Gibsiloy" Contacts].—(*Journ. of Scient. Instr.*, May 1940, Vol. 17, No. 5, p. 129.)

3186. "DIE SELBSTTATIGE REGELUNG IN DER ELEKTROTECHNIK" [Theoretical Concepts & Practical Applications of Automatic Regulators: Book Review].—Leonhard. (*Gen. Elec. Review*, May 1940, Vol. 43, No. 5, p. 225.)

3187. AMPLIFIER VOLTAGE SUPPLY [Electronic Stabiliser for Rectified A.C. Supply to High-Gain Amplifier for Auditory Action Potentials].—Witting. (*Review Scient. Instr.*, May 1940, Vol. 11, No. 5, p. 182.)

3188. REMOTE CONTROL OF ROTARY SWITCHES [Electro-Mechanical Link employing a Geneva Movement].—Rudd & Craig. (*A.W.A. Tech. Review*, No. 1, Vol. 5, 1940, pp. 1–19.)

3189. COMMENT ON "CONSTANT-POTENTIAL RECTIFICATION."—Stevens & Walker. (*See* 2939.)

3190. ON THE QUANTITATIVE CARRYING-THROUGH OF THE SPACE-CHARGE AND BORDER-LAYER THEORY OF THE CRYSTAL RECTIFIER.—Schottky & Spenke. (*See* 2976.)

3191. THE DRY-PLATE RECTIFIER IN ELECTRICAL MEASURING TECHNIQUE.—Grave. (*See* 3136.)

3192. THE EFFECT OF TEMPERATURE ON THE RESISTANCE OF COPPER-OXIDE RECTIFIERS.—Vitenberg. (*Elektrosvyaz*, No. 1, 1940, pp. 26–32: Russian only.)

For previous work *see* 2440 of June and 2751 of July. Formulae are derived for calculating the forward & backward resistances as determined by the ambient temperature, and curves are plotted for simplifying the calculations.

3193. ON THE RECTIFYING EFFECT OF SEMI-CONDUCTORS WITH BLOCKING LAYERS [Theory of Action, conforming with Experimental Results].—Pekar. (*Physik. Berichte*, No. 3, Vol. 21, 1940, p. 348.)

3194. UNIPOLAR DYNAMOS FOR LOW VOLTAGES AND HIGH CURRENTS [Modern Designs better than Dry-Plate Rectifiers, etc.].—Zorn. (*E.T.Z.*, 18th April 1940, Vol. 61, No. 16, pp. 358–360.)

www.americanradiohistory.com

3195. THE ANISOTROPY OF HYSTERESIS IN FERROMAGNETIC SINGLE CRYSTALS: II [including Improvement of Commercial Materials by employing Advantageous Crystallographic Orientations].—Shur. (*Journ. of Phys.* [of USSR], No. 1, Vol. 2, 1940, pp. 5–10: in English.)

3196. ON THE THEORY OF THE TECHNICAL MAGNETISATION CURVE IN FERROMAGNETIC SINGLE CRYSTALS [Anisotropy of the Coercive Force], *and* THE ENERGY OF MAGNETIC ANISOTROPY AND THE CRITICAL FIELD OF A FERROMAGNETIC COOLED IN A MAGNETIC FIELD.—Vonsovsky. (*Journ. of Phys.* [of USSR], No. 1, Vol. 2, 1940, pp. 11–18: pp. 19–23: in English.)

3197. ON HYSTERESIS IN FERROMAGNETICS [Theoretical and Experimental Investigation (with Experiments on Cold-Drawn Wires of Ferro-Nickel Alloy & Nickel)].—Kondorsky. (*Journ. of Phys.* [of USSR], No. 2, Vol. 2, 1940, pp. 161–181: in English.)

3198. MAGNETIC VISCOSITY OF SINGLE CRYSTALS OF IRON, *and* EFFECT OF SPECIAL HEAT TREATMENT [Tensions while Hot & during Cooling] ON MAGNETIC PERMEABILITY OF NICKEL-IRON ALLOYS.—Nishina. (*Sci. Abstracts*, Sec. A, 25th April 1940, Vol. 43, No. 508, p. 335: p. 335.)

3199. MAGNETIC PROPERTIES OF RECRYSTALLISATION TEXTURES, *and* OTHER PAPERS.—Mussmann, Schlechtweg. (*Physik. Berichte*, No. 7, Vol. 21, 1940, p. 706, 707.) *See* also Schlechtweg, *ibid.*, No. 5, Vol. 21, p. 508.

3200. STATISTICAL DOMAIN THEORY OF FERROMAGNETIC CRYSTALS.—Takagi. (*Sci. Abstracts*, Sec. A, 25th May 1940, Vol. 43, No. 509, pp. 426–427.)

"A feature of the theory is that for many magnetic phenomena a single mathematical expression is deduced both for weak and strong fields, and new relations between some magnetic quantities are derived."

3201. TESTING PERMANENT MAGNETS [Easier & Quicker Testing by Use of Two Identical Search Coils, differentially, with Standard Magnet].—Marsh. (*Journ. of Scient. Instr.*, June 1940, Vol. 17, No. 6, pp. 162–163.)

3202. ON THE DESIGN OF CIRCUITS USING PERMANENT MAGNETS, OF THE POLARISED-RELAY TYPE.—Milstein. (*Elektrosvyaz*, No. 1, 1940, pp. 24–25: Russian only.)

In designing such circuits it is usual to regard the permanent magnets as electro-magnets of certain m.m.f. and reluctance. These values are here determined by a graphical method.

3203. THE Al-Si-Fe ALLOYS OF A HIGHLY STABLE MAGNETIC PERMEABILITY [for Coil Cores in Communication Apparatus: Detailed Description of Properties & Manufacture: A.F. and H.F. Test Results (up to 50 kc/s) compare favourably with Electrolytic Iron & Permalloy].—Scholz, Rabkin, & Morozov. (*Elektrosvyaz*, No. 1, 1940, pp. 70–80: Russian only.)

3204. A MAGNETIC STUDY OF THE TWO-PHASE IRON-NICKEL ALLOYS.—Pickles & Sucksmith. (*Proc. Roy. Soc.*, Ser. A, 12th June 1940, Vol. 175, No. 962, pp. 331–344.)

3205. FERROMAGNETIC GOLD/IRON ALLOYS.—Pan & others. (*Phys. Review*, 15th March 1940, Ser. 2, Vol. 57, No. 6, p. 569: abstract only.)

3206. GOLD-CHROMIUM RESISTANCE ALLOY.—Schulze. (*See* 3130.)

3207. A NEW FORM OF THE SAUTER X-RAY GONIOMETER [with Synchronism between Rotations of Crystal and Film by Synchronous Motors].—Thomas. (*Journ. of Scient. Instr.*, June 1940, Vol. 17, No. 6, pp. 141–149.)

STATIONS, DESIGN AND OPERATION

3208. THE NEW FREQUENCY-MODULATED TRANSMITTER OF WDRC-WIXPW, *and* OBSERVATIONS ON COVERAGE WITH FREQUENCY-MODULATED WAVES.—McLeod: de Mars. (*Proc. Inst. Rad. Eng.*, March 1940, Vol. 28, No. 3, p. 148: p. 150: summaries only.) *See* also *ibid.*, April 1940, p. 197 (Kiebert).

3209. A COMPACT 112-Mc. STATION: COMPLETE UNIT FOR PORTABLE OR MOBILE USE, *and* A 56-MEGACYCLE MOBILE STATION.—Lawrence: Lynch. (*QST*, May 1940, Vol. 24, No. 5, pp. 15–18: pp. 40–43.)

3210. THE OFFICE SEPARATING FILTERS ["Amtsweichen," at Input End of Each Subscriber's Line] FOR H.F. WIRE BROADCASTING [Various Systems, leading to Final Solution].—Dold & Ohlrogge. (*E.T.Z.*, 18th April 1940, Vol. 61, No. 16, p. 363: summary only.)

3211. APPARATUS FOR MEASURING THE IMPEDANCE OF BROADCASTING [Rediffusion] FEEDERS.—Meerovich, Lebedev & Nikonov. (*Elektrosvyaz*, No. 6, 1939, pp. 84–95: Russian only.)

A brief discussion is given of special requirements imposed on measurements made on feeders used in radio rediffusion, and this is followed by a description of several methods proposed by the writers. These methods are based on determining the ratio of the output voltages of two filter channels fed from two transformers connected respectively in parallel and in series with the input transformer of the feeder (Fig. 1). The properties of the apparatus necessary for these measurements are discussed (the frequency characteristics of the channels, the permissible deviation between the two characteristics, working voltage range, sensitivity with regard to changes in feeder conductance, etc.) and a description is given, with diagrams, of two pieces of apparatus constructed by the writers.

3212. LONG-DISTANCE BROADCASTING [Royal Institution Paper, abridged].—Ashbridge. (*Engineer*, 3rd & 10th May 1940, Vol. 169, pp. 415–416 & 444.)

www.americanradiohistory.com

3213. SOUTH AFRICAN BROADCASTING EQUIPMENT [Receiving Apparatus & Auxiliary Plant at the Panorama Rebroadcasting Station]. —(*Engineer*, 7th June 1940, Vol. 169, p. 524.)

3214. A MODERN RADIO-TELEGRAPH SYSTEM ["Villa Elisa" Station of Transradio Internacional, Argentina: Two Channels for Simultaneous High-Speed Operation, from Single Transmitter & Output Stage]. —Noizeux, Krähenbühl, & Novics. (*Proc. Inst. Rad. Eng.*, April 1940, Vol. 28, No. 4, p. 195: summary only.)

3215. BALDOCK RADIO-TELEPHONE RECEIVING STATION.—Evans & Luckhurst. (*P.O. Elec. Eng. Journ.*, Jan. 1940, Vol. 32, Part 4, pp. 256–260.)

3216. OLD AND NEW TECHNIQUE OF TELEGRAPH APPARATUS [Baudot, Hughes, etc: Advantages of the Siemens & Halske Teleprinter].—Wüsteney. (*T.F.T.*, Jan. 1940, Vol. 29, No. 1, pp. 9–16.)

3217. TRANSMISSION FEATURES OF THE WEATHER ANNOUNCEMENT SYSTEM [as used by New York and Other Telephone Companies].—Merrill. (*Bell Lab. Record*, May 1940, Vol. 18, No. 9, pp. 283–286.) *See* also 1649 of April.

3218. "AIRCRAFT RADIO AND ELECTRICAL EQUIPMENT" [Book Review].—Morgan. (*Proc. Inst. Rad. Eng.*, March 1940, Vol. 28, No. 3, p. 151.)

GENERAL PHYSICAL ARTICLES

3219. THE RADIO-FREQUENCY SPECTRA OF ATOMS: HYPERFINE STRUCTURE AND ZEEMAN EFFECT IN THE GROUND STATES.—Kusch, Millman, & Rabi. (*Phys. Review*, 1st May 1940, Ser. 2, Vol. 57, No. 9, pp. 765–780.) *See* also 2775 of July.

3220. THE STRUCTURE OF THE NEGATIVE ION [particularly of Hydrogen: Frequencies of Precession of Electron in Nuclear Magnetic Fields: of Order of 10^8 c/s: Agreement with Experimental Values]: DETERMINATION OF NUCLEAR MAGNETIC MOMENT.—Jonescu. (*Comptes Rendus*, 15th May 1940, Vol. 210, No. 20, pp. 699–701.) For previous work see 71 & 1410 of 1939 and back references.

3221. THE ELECTRONIC CHARGE [measured by New Oil Drop Method, with Horizontal Electric Field].—Laby & Hopper. (*Nature*, 15th June 1940, Vol. 145, pp. 932–933.)

3222. A NOTE ON THE VELOCITY DISTRIBUTION [for Motion in 3 Directions] OF GASEOUS MOLECULES, AND A TABLE FOR OBTAINING VALUES OF THE ERROR FUNCTION COMPLEMENT.—Heatley. (*Canadian Journ. of Res.*, May 1940, Vol. 18, No. 5, Sec. B, pp. 123–127.)

3223. ON THE DISSIPATION OF ELECTRICITY IN AN ENCLOSED AIR MASS ["Geitel Effect" (Gradual Increase, with Time, in Dissipating Power) shown to be merely Instrumental].—Walter. (*Ann. der Physik*, Ser. 5, No. 4, Vol. 37, 1940, pp. 326–332.)

3224. NEUTRALISATION CROSS-SECTION AND ANGULAR DISTRIBUTION IN COLLISIONS BETWEEN He^+ AND He [calculated for 3 Velocities of Incident Ion].—Dallaporta. (*Sci. Abstracts*, Sec. A, 25th May 1940, Vol. 43, No. 509, p. 419.)

3225. THE CROSS-SECTION FOR CHANGE OF CHARGE AND IONISATION BY HIGH-VELOCITY METALLIC IONS IN HYDROGEN AND HELIUM.—Sherwin. (*Phys. Review*, 1st May 1940, Ser. 2, Vol. 57, No. 9, pp. 814–821.)

3226. SPECULAR REFLECTION OF X-RAYS BY HIGH-FREQUENCY SOUND WAVES [illustrated by Laue Pattern of Diamond with Dynamic Stratifications of Density].—Raman & Nilakantan. (*Nature*, 27th April 1940, Vol. 145, p. 667.) *See* also Zachariasen, *ibid.*, 29th June, p. 1019.

3227. A NEW X-RAY EFFECT [Specular Reflection by Crystals, with Frequency Change explicable only on Quantum-Mechanical Principles].—Raman & Nilakantan. (*Current Science*, Bangalore, April 1940, Vol. 9, No. 4, pp. 165–167.)

3228. THE THEORY OF THE ELECTRIC CHARGE AND THE QUANTUM THEORY [based on Principle that Fundamental Equation of Quantum Theory can be developed by Appeal to Simple Geometrical Ideas]: I.—Flint. (*Phil. Mag.*, April 1940, Ser. 7, Vol. 29, No. 195, pp. 330–343.)

3229. THE GIBBS QUANTUM ENSEMBLE AND ITS CONNECTION WITH THE CLASSICAL ENSEMBLE.—Blokhintzev [Blochinzev]. (*Journ. of Phys.* [of USSR], No. 1, Vol. 2, 1940, pp. 71–74: in English.)

3230. THE EQUATIONS OF MOTION IN ELECTRODYNAMICS [Formulation of Equations of Motion of Singularities in Classical Electromagnetic Theory].—Infeld & Wallace. (*Phys. Review*, 1st May 1940, Ser. 2, Vol. 57, No. 9, pp. 797–806.)

3231. AN ATTEMPT AT A SYNTHESIS BETWEEN WAVE MECHANICS AND CORPUSCULAR MECHANICS.—Planck. (*Ann. der Physik*, No. 4, Vol. 37, Ser. 5, 1940, pp. 261–277.)

3232. CONSIDERATIONS CONCERNING THE FUNDAMENTS OF THEORETICAL PHYSICS.—Einstein. (*Science*, 24th May 1940, Vol. 91, pp. 487–492.) Address to Eighth American Scientific Congress. For a slightly abridged version see *Nature*, 15th June, Vol. 145, pp. 920–924.

3233. THE CHARACTERISTIC VELOCITY OF THE GRAVITATIONAL AND ELECTRICAL FIELDS.—Laboccetta. (*La Ricerca Scient.*, March 1940, Year 11, No. 3, pp. 182–185.)

www.americanradiohistory.com

3234. "MÉCANIQUE ONDULATOIRE DE L'ÉLECTRON ET DU PHOTON" [Book Review].—Géhéniau. (*Rev. Gén. de l'Élec.*, 13th/20th April 1940, Vol. 47, No. 15/16, p. 268.) Third volume in de Donder's series on "Mathematical Chemistry": for other work under his auspices *see* 1337 of 1939.

3235. NUCLEAR FISSION [and the Brakes in Nature impeding the Slide toward Catastrophe].—Darrow. (*Bell S. Tech. Journ.*, April 1940, Vol. 19, No. 2, pp. 267–289.)

For an article entitled "Atomic Power," giving "a fair picture of what is happening," see *Science*, 17th May 1940, Vol. 91, Supp. pp. 8, 10 (p. 10 contains also a note on Krasny-Ergen's work—*see* also *Nature*, 11th May 1940, pp. 742–743).

3236. THE POLARISATION OF MOLECULES: APPLICATION TO THE STUDY OF ADSORPTION AND GREASINESS.—Trillat. (*Elec. Communication*, April 1940, Vol. 18, No. 4, pp. 303–316.)

3237. A GENERALISATION OF MAXWELL'S RELAXATION THEORY OF ELASTICITY AND VISCOSITY OF AMORPHOUS BODIES.—Frenkel & Obrastzov. (*See* 3085.)

MISCELLANEOUS

3238. THE PRINCIPLES OF A MECHANICAL METHOD FOR CALCULATING REGRESSION EQUATIONS AND MULTIPLE CORRELATION COEFFICIENTS, AND FOR THE SOLUTION OF SIMULTANEOUS LINEAR EQUATIONS.—Schumann. (*Phil. Mag.*, March 1940, Ser. 7, Vol. 29, No. 194, pp. 258–273.)

3239. ON THE TIME DISTRIBUTION OF SO-CALLED RANDOM EVENTS.—Feller: Ruark. (*Phys. Review*, 15th May 1940, Ser. 2, Vol. 57, No. 10, pp. 906–908.)

3240. THE CONSTRUCTION OF TECHNICAL DIAGRAMS OF HIGH MATHEMATICAL ORDER BY MEANS OF SIMPLE GEOMETRICAL RELATIONS.—Winkel. (*E.T.Z.*, 28th March & 4th April 1940, Vol. 61, Nos. 13 & 14, pp. 311–312 & 326–328.)

3241. "SCHALTSCHEMATA UND DIFFERENTIALGLEICHUNGEN ELEKTRISCHER UND MECHANISCHER SCHWINGUNGSGEBILDE" [Vibrating Systems: Book Review].—Hecht. (*Hochf:tech. u. Elek:akus.*, April 1940, Vol. 55, No. 4, p. 136.)

3242. "STATISTICAL MATHEMATICS," *and* "PROBABILITY AND FREQUENCY" [Book Reviews].—Aitken: Plummer. (*BEAMA Journ.*, May 1940, Vol. 46, No. 35, p. 142: p. 143.)

3243. "MATHEMATICAL METHODS IN ENGINEERING" [Book Review].—von Karman & Biot. (*Science*, 31st May 1940, Vol. 91, pp. 527–528.)

3244. "ORTHOGONAL POLYNOMIALS" [Book Review].—Szegö. (*Science*, 31st May 1940, Vol. 91, pp. 526–527.)

3245. A NOTE ON HEAVISIDE'S EXPANSION THEOREM [Practical Process for dealing with Complex Zeros of Denominator of Operator Function: Trigonometric Operands].—Miller. (*Journ. of Applied Phys.*, May 1940, Vol. 11, No. 5, pp. 343–346.)

3246. RELAXATION METHODS APPLIED TO ENGINEERING PROBLEMS: V, *and* VI—THE NATURAL FREQUENCIES OF SYSTEMS HAVING RESTRICTED FREEDOM [including Extension to Entirely Unconstrained & Other Systems].—Gandy, Pellew, Southwell. (*Phil. Trans. of Roy. Soc. London*, 29th Feb. 1940, Ser. A, Vol. 238, No. 796, pp. 453–475: *Proc. Roy. Soc.*, 12th June 1940, Ser. A, Vol. 175, No. 962, pp. 262–290.) A summary of I was dealt with in 738 of February.

3247. ERROR IN PAPER ON "CERTAIN VIBRATION PROBLEMS SOLVED BY MEANS OF AN ANALOGOUS PROBLEM IN HEAT CONDUCTION" [Correction to Mathematics].—Green. (*Phil. Mag.*, Jan. 1940, Ser. 7, Vol. 29, No. 192, pp. 100–102.) *See* 755 of 1937.

3248. VALUES OF THE BESSEL FUNCTIONS ber x AND bei x AND THEIR DERIVATIVES [Introduction, References, & Tables].—Dwight. (*Elec. Engineering*, Supp. No. Transactions, 1939, Vol 58, pp. 787–790.) Used for the calculation of current distribution in conductors of large cross section at power frequencies and in smaller wires at radio frequencies.

3249. ADDITION AND SUBTRACTION LOGARITHMS [for obtaining log $(a \pm b)$ when log a & log b have already been found].—Addey. (*P.O. Elec. Eng. Journ.*, Jan. 1940, Vol. 32, Part 4, pp. 244–246.) Sometimes known as Gaussian logarithms.

3250. MERCURY POISONING [Danger for Experimental Workers: Method of Detection: Precautions].—Giese. (*Science*, 17th May 1940, Vol. 91, pp. 476–477.)

3251. CONTROL OF WIRELESS TRANSMITTERS AND OTHER ELECTRICAL APPARATUS UNDER THE DEFENCE REGULATIONS, 1939.—Gould. (*P.O. Elec. Eng. Journ.*, April 1940, Vol. 33, Part 1, pp. 28–32.)

3252. "RECORDS AND RESEARCH IN ENGINEERING AND INDUSTRIAL SCIENCE" [Book Reviews].—Holmstrom. (*BEAMA Journ.*, May 1940, Vol. 46, No. 35, p. 142: *Journ. of Scient. Instr.*, June 1940, Vol. 17, No. 6, p. 167.)

3253. GUIDES TO SOURCES OF SPECIALIST INFORMATION [Notice of "Aslib" War-Time Guides]. (*Engineering*, 3rd May 1940, Vol. 149, p. 473.)

3254. THE ENGINEERING SOCIETIES LIBRARY [and Its Photostat, Microfilm, & Other Services].—(*Science*, 12th April 1940, Vol. 91, pp. 350–351.)

3255. MICROFILM WITH THE 35-MILLIMETER CANDID CAMERA [read with Seidell Hand Reader costing 1½ Dollars].—Reid. (*Science*, 7th June 1940, Vol. 91, pp. 555–556.)

www.americanradiohistory.com

3256. THE PROGRAMMES OF SCIENTIFIC MEETINGS [Criticism, and Plea for Equal Times for Paper and Discussion].—Mendenhall. (*Science*, 26th April 1940, Vol. 91, p. 406.)

3257. COMPOUND WORDS IN SCIENTIFIC NOMENCLATURE [and the System given in the *Style Manual of the Department of State*, Washington, and the Writer's Book.].—Ball. (*Science*, 7th June 1940, Vol. 91, pp. 545–546.)

3258. SOME NOTES ON THE NAMING OF INSTRUMENTS [and the Dangers of Unfortunate Nomenclature].—Williamson. (*Journ. of Scient. Instr.*, May 1940, Vol. 17, No. 5, pp. 101–103.) For an editorial by G.W.O.H. see *Wireless Engineer*, July 1940, pp. 295–296.

3259. "THE JOURNAL OF THE INSTITUTION OF ELECTRICAL ENGINEERS": SUBDIVISION INTO THREE PARTS FROM JANUARY, 1941. —(*Journ. I.E.E.*, June 1940, Vol. 86, No. 522, pp. 611–612.)

3260. STANDARDISATION FOR HOME AND EXPORT [Editorial on the I.E.E. Wireless Section Debate].—(*Wireless World*, June 1940, Vol. 46, No. 8, p. 275.)

3261. THE MARKETS OF LATIN AMERICA.—(*Engineering*, 17th May 1940, Vol. 149, pp. 497–498.)

3262. A BUREAU OF STANDARDS FOR INDIA, *and* A NATIONAL RESEARCH COUNCIL FOR INDIA. —(*Current Science*, Bangalore, April 1940, Vol. 9, No. 4, pp. 161–164: pp. 188–189.)

3263. "THE NATIONAL PHYSICAL LABORATORY: REPORT FOR THE YEAR 1939" [Book Review]. —(*Wireless Engineer*, June 1940, Vol. 17, No. 201, p. 256.)

3264. "HANDBUCH DES DEUTSCHEN RUNDFUNKS 1939/1940" [Book Review].—Weinbrenner. (*E.N.T.*, Feb. 1940, Vol. 17, No. 12, p. 50.)

3265. A RETROSPECTIVE SURVEY OF THE YEAR 1939 IN THE FIELD OF COMMUNICATIONS [including Wire Broadcasting & Television].—Nagel. (*T.F.T.*, March 1940, Vol. 29, No. 3, pp. 63–68.)

3266. A RECORDING MICROPHOTOMETER [using a Photronic Cell]: *also* DIFFUSE REFLECTION METER: *and* FOOT-CANDLE METER.—(*Journ. of Scient. Instr.*, May 1940, Vol. 17, No. 5, pp. 103–111: pp. 123–124: p. 124.)

3267. A SIMPLIFIED HIGH-SENSITIVITY PHOTOMETER OR EXPOSURE METER FOR PHOTOGRAPHIC ENLARGING.—Roberts. (*Review Scient. Instr.*, May 1940, Vol. 11, No. 5, pp. 159–160.)

3268. THE DETERMINATION OF THE SMALLEST IRON CONTENT IN ALUMINIUM WITH THE HELP OF PHOTOELECTRIC PRECISION PHOTOMETRY.—Kofler & von Halban. (*Helvetica Chim. Acta*, Fasc. 6, Vol. 22, 1939, pp. 1395–1403.)

3269. A LINEAR DENSITOMETER [Combination of Vacuum Photocell and Meagher & Bentley's Logarithmic (Hot Cathode) Measuring Circuit].—Tiedeman. (*Phys. Review*, 15th May 1940, Ser. 2, Vol. 57, No. 10, p. 942: summary only.) *See* 741 of February.

3270. THE EARTHQUAKE ANALYSER [Photocell/Tuned-Galvanometer Analyser for Seismograms, applicable also to Sunspot Records, etc.].—Ruge. (*Science*, 7th June 1940, Vol. 91, Supp. p. 12.)

3271. NEW TYPES OF PHOTOELECTRICALLY CONTROLLED REGULATING DEVICES [for Commercial Purposes: Use of Alkali Photocells, particularly the Gas-Filled Red-Sensitive Cs-Cs_2O-Ag Cell directly controlling an Ionic Relay Valve and allowing Under-Burning of Illuminating Lamp (Joens & Co.): for Temperature Control, etc: Comparison between "Compensation" and "Deflection" Methods: etc.].—Kuntze. (*E.T.Z.*, 29th Feb. 1940, Vol. 61, No. 9, pp. 195–198.)

3272. A NEW ELECTRICITY-METER CALIBRATING EQUIPMENT [with Photocell Device].—Jürgens. (*E.T.Z.*, 22nd Feb. 1940, Vol. 61, No. 8, pp. 161–163.)

3273. A PHOTOELECTRIC TIME-INTERVAL METER [measuring Short Time Intervals in Mechanisms (Camera Shutters, Synchronising Mechanisms, etc.) without Interference with Motion: Use of Pentode Secondary Emission].—Berry. (*Gen. Elec. Review*, March 1940, Vol. 43, No. 3, pp. 137–138.)

3274. INVENTIONS WIN WARS [Detection of Submarines & Aeroplanes: Advice to "Free-Lance" Inventors].—Wenstrom. (*Scient. American*, June 1940, Vol. 162, No. 6, pp. 325–327.) *See* also editorial in *Engineer*, 31st May 1940, pp. 497–498.

3275. DAMPED ELECTROMAGNETIC WAVES IN HOLLOW METAL PIPES [including Possibility of Detecting Small Deformations in "Circular" Pipes].—Melloh. (*See* 2861.)

3276. ENERGY DISTRIBUTION IN THE NEAR ZONE OF TRANSMITTING DIPOLES UNDER WATER, WITH THE USE OF REFLECTORS [Experiments on an (Air) Wavelength of 107 cm: Conductivity reduces Intensity much more quickly than by Optical Law: Tests on Muscular Tissue: etc.].—Pätzold & Osswald. (*Strahlentherapie*, No. 2, Vol. 66, 1939, pp. 303–313.)

3277. COSMO-PHYSICAL DISTURBANCES OF THE IONOSPHERE, TROPOSPHERE, AND BIOSPHERE [with Particular Reference to Biological Effects ("Meteoropathy": Effect of Thunderstorms on Colloidal Liquids: etc.)]. —Düll & Düll. (*Physik. Berichte*, No. 4, Vol. 21, 1940, p. 449.) *See* also Traute & Düll, 3736 of 1935.

www.americanradiohistory.com